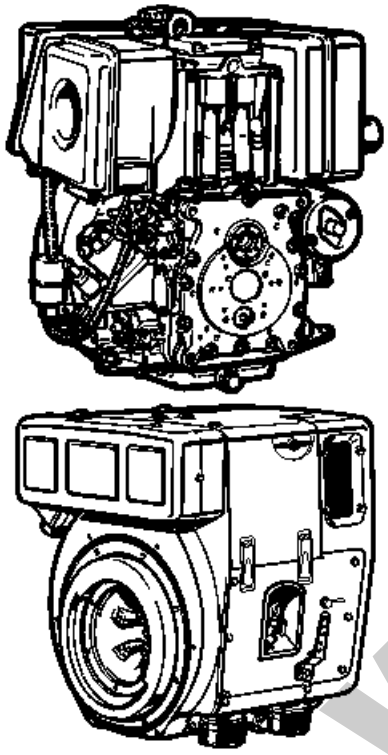

S
Z
T
U

C

# 1D30.18

M

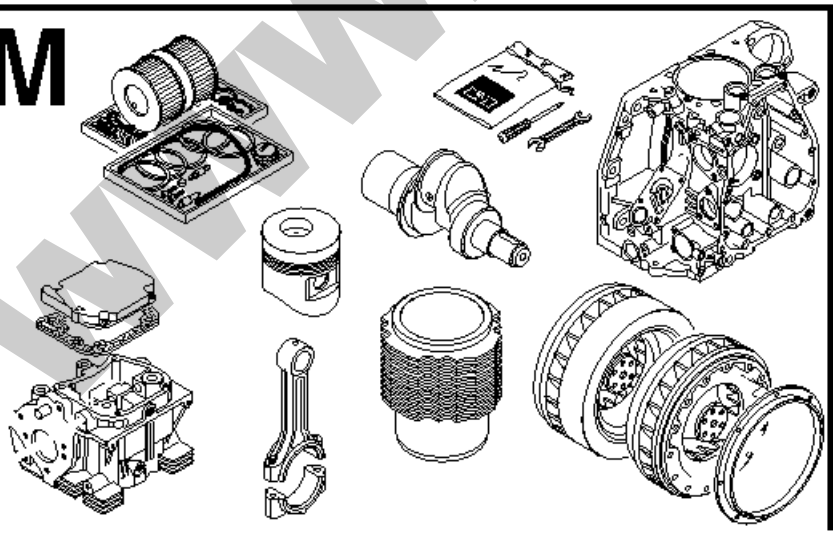

A

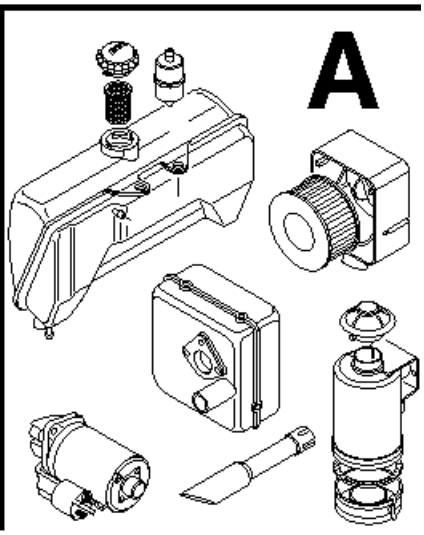

WWW.WOBIS.PL

| Pos. | Description | Notice |
|---|---|---|
| M | Basic engine 1 D 30.18 | |
| A | Equipements 1 D 30.18 | |
| | | |
| | | |
| | | |
| | | |
| | | |
| | | |
| | | |
| | | |
| | | |
| | | |
| | | |
| | | |
| | | |
| | | |
| | | |
| | | |
| | | |
| | | |
| | | |
| | | |
| | | |
| | | |
| | | |
| | | |
| | | |
| | | |
| | | |
| | | |
| | | |
| | | |

WWW.WOBIS.PL

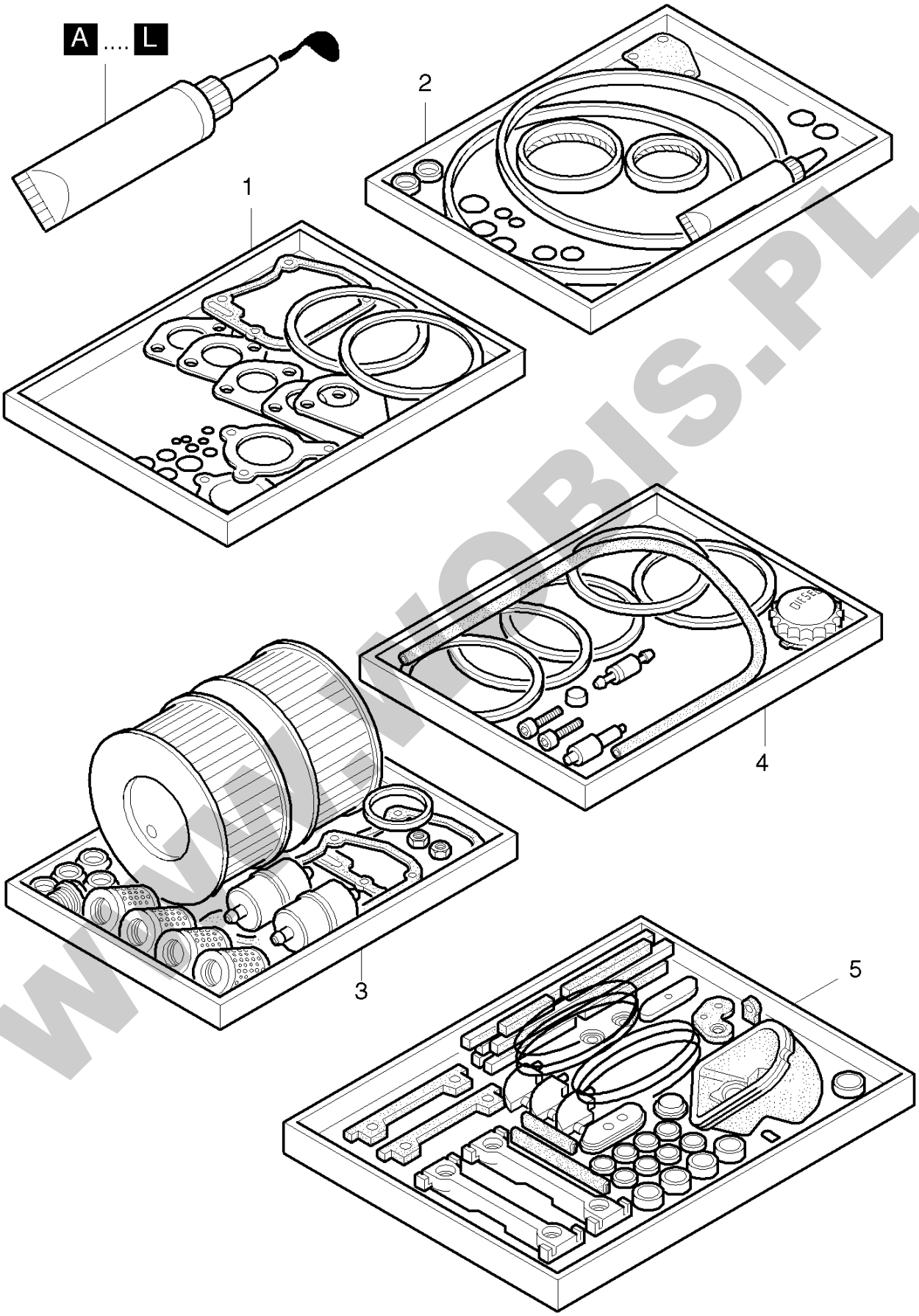


WWW.WOBIS.PL

| Pos. | Part no. | Description | Qty. | Notice | Add. notice | kg | EA | TA | DA | dDPW | List price |
|---|---|---|---|---|---|---|---|---|---|---|---|
| 1 | 01279712 | GSKT.S.CYL.HD.30/40 | 1 | | | 0,150 | 1 | 12 | 0 | | |
| 2 | 01279801 | GASK.S.CRNKC.D30-50 | 1 | part was replaced by 01279802 | | 0,175 | 0 | 12 | 7 | | |
| 3 | 01279910 | MAINT.KIT D30/41C 1 | 1 | | | 1,200 | 1 | 12 | 1 | | |
| 3 | 01292610 | MAINT KIT 1D30/50 3 | 1 | | | 1,130 | 1 | 12 | 1 | | |
| 4 | 01280111 | EMGCY.KIT D30/35/40 | 1 | | | 0,360 | 1 | 12 | 0 | | |
| 4 | 01502501 | EMERGEN.KIT D30/40C | 1 | | | 0,338 | 1 | 12 | 0 | | |
| 5 | 01502100 | RUBB.COMP.S.D30/41C | 1 | | | 1,500 | 1 | 12 | 1 | | |
| A | 50223001 | LOCTITE ACTIVATOR N | 1 | 500 ML DIN 7649 | | 0,580 | 4 | 12 | 0 | | |
| B | 50223101 | LOCTITE 574 | 1 | 50 ML | | 0,088 | 4 | 12 | 0 | | |
| C | 50223200 | LOCTITE 601 | 1 | 50 ML | | 0,079 | 4 | 12 | 0 | | |
| D | 50223300 | LOCTITE 221 | 1 | 50 ML | | 0,077 | 4 | 12 | 0 | | |
| E | 50223400 | LOCTITE 648 | 1 | 10 ML | | 0,021 | 4 | 12 | 0 | | |
| F | 50223900 | TECHNICOLL CLEANER | 1 | 750 GR | | 0,870 | 4 | 12 | 0 | | |
| F | 50223800 | TECHNICL.ADHES.8058 | 1 | 750 GR | | 0,875 | 4 | 12 | 0 | | |
| G | 50256501 | LOCTITE IS 407 | 1 | 20 ML | | 0,033 | 4 | 12 | 0 | | |
| H | 50282501 | SILICON SEALER | 1 | 30ML 1207 | | 0,055 | 4 | 12 | 1 | | |
| J | 50283004 | HIGH TEMP.PASTE | 1 | | | 0,110 | 4 | 12 | 0 | | |
| K | 50342600 | GREASE START.DEVICE | 1 | 100 GRAMM<br>part was replaced by 50342601 | | 0,100 | 0 | 12 | 0 | | |
| L | 50256600 | SILICON SEALER | 1 | | | 0,130 | 4 | 12 | 0 | | |
| M | 50485100 | GRINDING PASTE 80ML | 1 | | | 0,113 | 4 | 12 | 1 | | |
| | | | | | | | | | | | |
| | | | | | | | | | | | |
| | | | | | | | | | | | |
| | | | | | | | | | | | |
| | | | | | | | | | | | |
| | | | | | | | | | | | |
| | | | | | | | | | | | |
| | | | | | | | | | | | |
| | | | | | | | | | | | |
| | | | | | | | | | | | |

WWW.WOBIS.PL

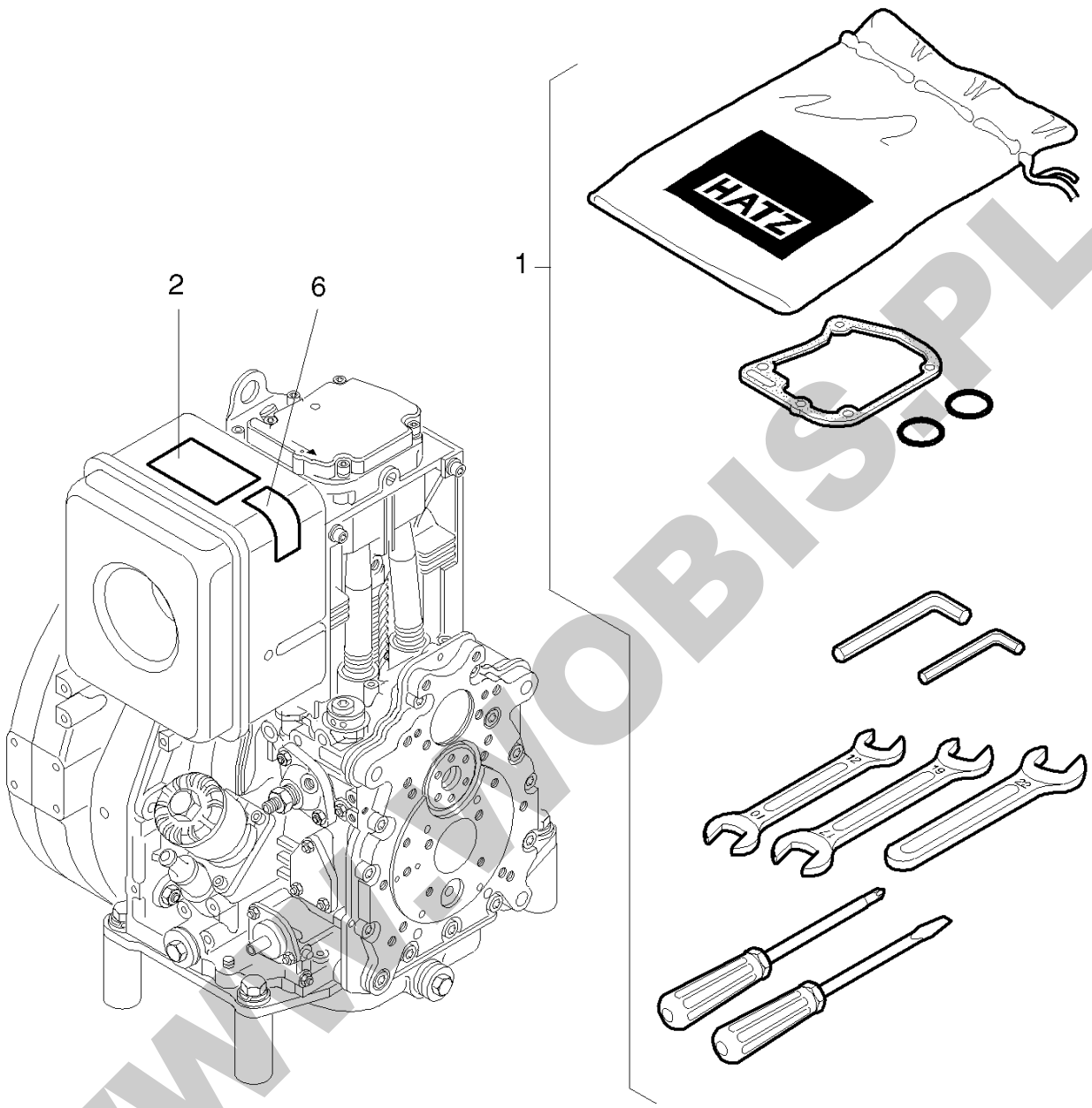


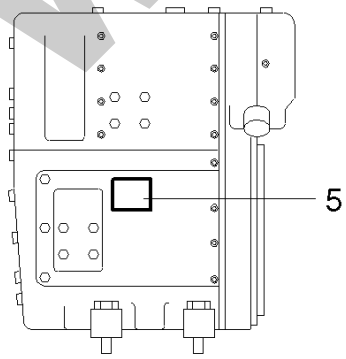


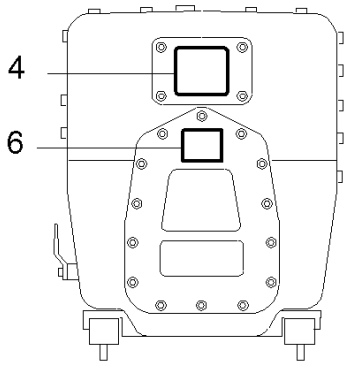


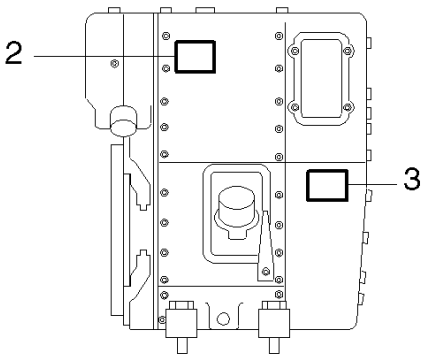


WWW.WOBIS.PL

| Pos. | Part no. | Description | Qty. | Notice | Add. notice | kg | EA | TA | DA | dDPW | List price |
|---|---|---|---|---|---|---|---|---|---|---|---|
| 1 | 01247511 | ACCESSORIES KIT | 1 | Zubehörsatz - Accessories kit<br>part was replaced by 01247512 | | 0,569 | 0 | 11 | 0 | | |
| 2 | 04048300 | STICKER LABEL | 1 | part was replaced by 04048301 | | 0,003 | 0 | 11 | 7 | | |
| 3 | 03614401 | STICKER LABEL | 1 | | | 0,001 | 1 | 11 | 1 | | |
| 4 | 05034700 | STICKER SILENT PACK | 1 | | | 0,002 | 1 | 11 | 1 | | |
| 5 | 03614401 | STICKER LABEL | 1 | | | 0,001 | 1 | 11 | 1 | | |
| 6 | 05025200 | STICKER CR-START | 1 | Handstart, demarr. man. | | 0,001 | 1 | 21 | 1 | | |

WWW.WOBIS.PL

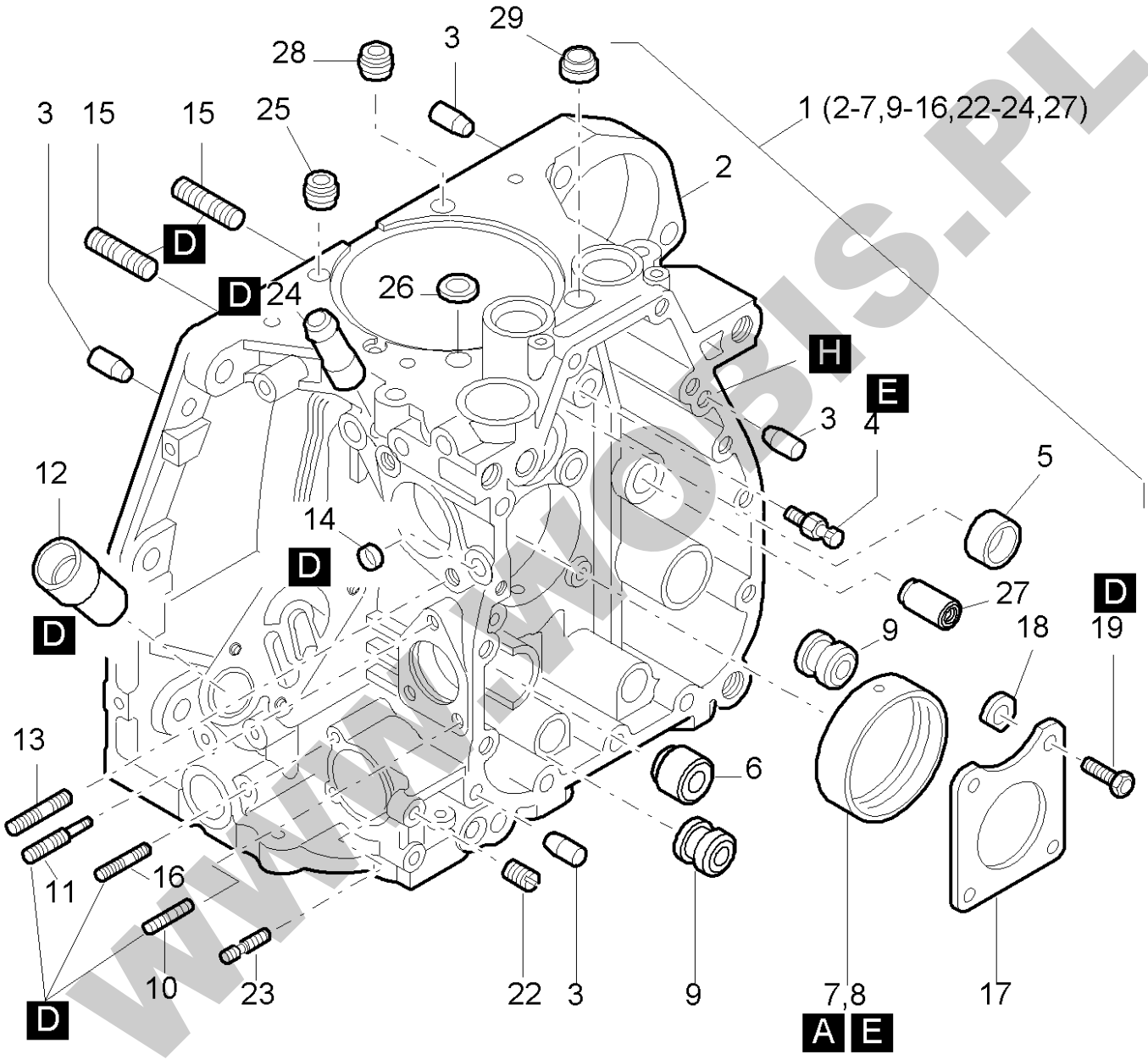
29
28
3
1 (2-7,9-16,22-24,27)
3
15
15
25
2
D
D
24
26
H
E
3
4
5
12
14
D
D
27
D
9
18
19
13
6
16
11
10
23
22
3
9
7,8
17
D
A
E

WWW.WOBIS.PL

| Pos. | Part no. | Description | Qty. | Notice | Add. notice | kg | EA | TA | DA | dDPW | List price |
|---|---|---|---|---|---|---|---|---|---|---|---|
| 1 | 01270240 | CRANKCASE 1D30/41 | 1 | | | 8,085 | 1 | 12 | 0 | | |
| 2 | _noorder | No single order | - | | | | | | | | |
| 3 | 50249101 | CYL.PIN 8M 6 X 20 | 4 | 8 M 6 x 20 DIN 6325 2-Fasen<br>part was replaced by 50249102 | | 0,005 | 9 | 11 | 0 | | |
| 4 | 04022602 | NOZZLE | 1 | | | 0,004 | 1 | 11 | 1 | | |
| 5 | 03793800 | BEARING BUSH | 1 | | | 0,009 | 1 | 11 | 1 | | |
| 6 | 04022700 | PLUG | 0... 1 | ø 25 mm | | 0,025 | 1 | 11 | 1 | | |
| 7 | 04022500 | MAIN BEARING | 1 | | | 0,058 | 4 | 11 | 1 | | |
| 8 | 04048800 | MAIN BEARING 0,5- | 1 | - 0,5 mm | | 0,100 | 4 | 14 | 1 | | |
| 9 | 04023600 | PLUG | 1... 2 | ø 25 mm | | 0,020 | 1 | 11 | 1 | | |
| 10 | 50144300 | STUD M 6X 16 | 2 | M 6 x 16 DIN 835 - 8.8 A3C | | 0,005 | 4 | 11 | 1 | | |
| 11 | 03794510 | STUD | 1 | | | 0,007 | 1 | 11 | 1 | | |
| 12 | 03794800 | INTERMEDIATE PIECE | 1 | | | 0,050 | 1 | 11 | 1 | | |
| 13 | 50098300 | STUD M8X20 | 2 | M 8 x 20 DIN 835-8.8 A3C | | 0,009 | 4 | 11 | 1 | | |
| 14 | 50325500 | COVER 10 | 1 | 10 DIN 443-St A3C | | 0,001 | 4 | 11 | 1 | | |
| 15 | 50037800 | STUD M 8X 22 | 8 | M 8 x 22 DIN 835-10.9 | | 0,012 | 4 | 11 | 1 | | |
| 16 | 50328200 | STUD M6X22 | 2 | M 6 x 22 DIN 835 - 8.8 A3C | | 0,006 | 4 | 11 | 1 | | |
| 17 | 04011650 | THRUST PLATE | 1 | part was replaced by 04011651 | | 0,000 | 0 | 11 | 7 | | |
| 18 | 04069500 | SHIM 1,05 | 0... 4 | 1,05 mm | | 0,001 | 1 | 11 | 1 | | |
| 18 | 04069600 | SHIM 1,2 | 0... 4 | 1,20 mm | | 0,002 | 1 | 11 | 1 | | |
| 19 | 04062010 | HEXSCREW M9 X 28 | 4 | M 9 x28 | | 0,017 | 1 | 11 | 1 | | |
| 22 | _nopart | Not in this engine | - | | | | | | | | |
| 23 | 04087400 | STUD M 6 X 22 | 1 | M 6 x 22 A3C<br>part was replaced by 50328200 | | 0,005 | 0 | 11 | 7 | | |
| 24 | _noorder | No single order | - | | | | | | | | |
| 25 | 50458400 | GASKET | 2 | | | 0,002 | 4 | 11 | 1 | | |
| 26 | 50392000 | JOINT 9,3X 14 | 2 | 9,3 x 14 | | 0,001 | 4 | 11 | 1 | | |
| 27 | 04105000 | PLUG 15MM | 1 | ø 15 mm | | 0,010 | 1 | 11 | 1 | | |
| 28 | _nopart | Not in this engine | - | | | | | | | | |
| 29 | _nopart | Not in this engine | - | | | | | | | | |
| A | 50223001 | LOCTITE ACTIVATOR N | 1 | 500 ML DIN 7649 | | 0,580 | 4 | 12 | 0 | | |

WWW.WOBIS.PL

| Pos. | Part no. | Description | Qty. | Notice | Add. notice | kg | EA | TA | DA | dDPW | List price |
|---|---|---|---|---|---|---|---|---|---|---|---|
| D | 50223300 | LOCTITE 221 | 1 | 50 ML | | 0,077 | 4 | 12 | 0 | | |
| E | 50223400 | LOCTITE 648 | 1 | 10 ML | | 0,021 | 4 | 12 | 0 | | |
| H | 50282501 | SILICON SEALER | 1 | 30ML 1207 | | 0,055 | 4 | 12 | 1 | | |

WWW.WOBIS.PL

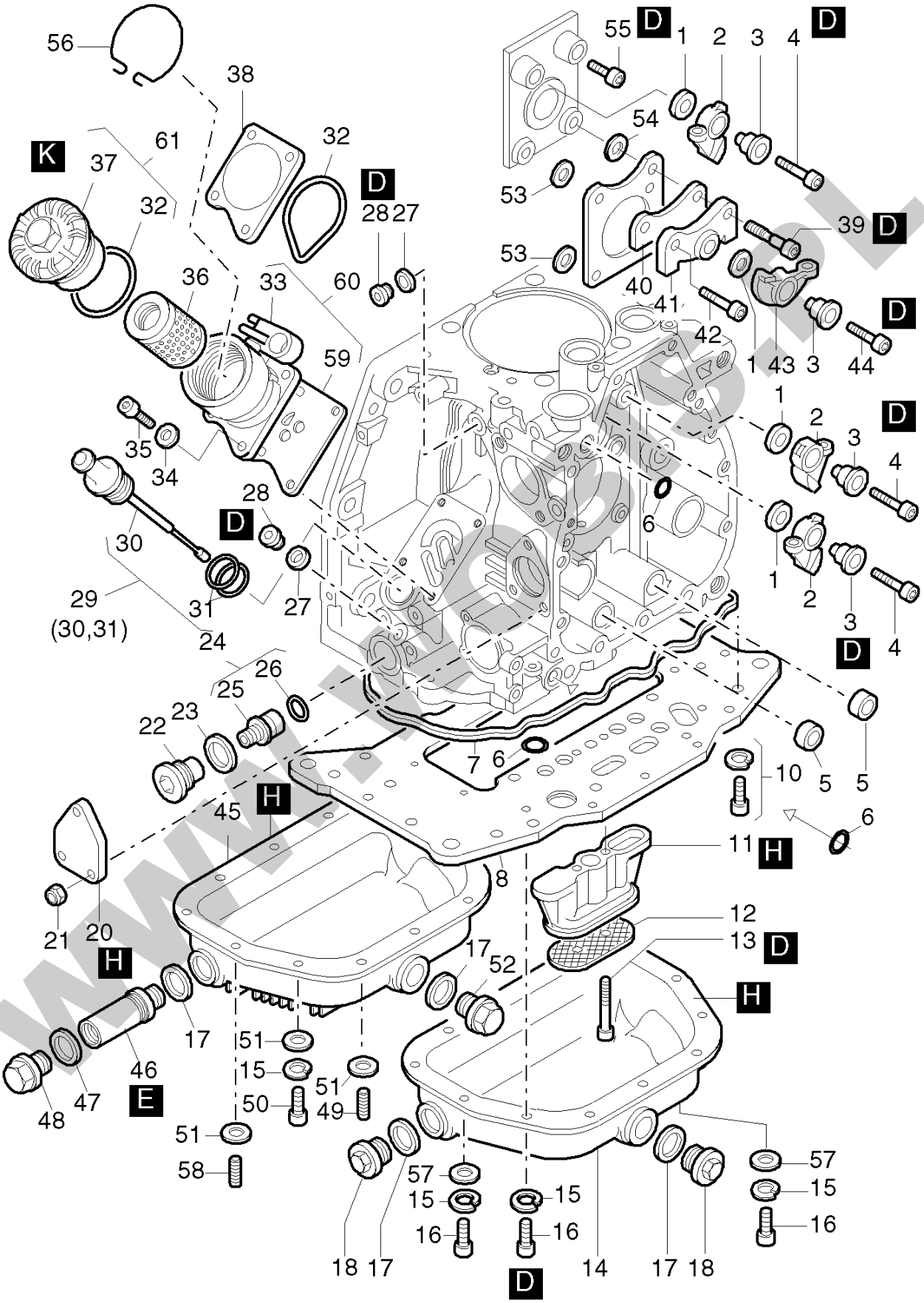
56
38
32
61
K
37
32
D
28 27
36
33
60
59
35
34
28
D
30
29
(30,31)
31
27
24
26
25
23
22
H
45
21
20
H
17
46
E
47
48
51
15
50
51
49
51
58
55
D
1
2
3
4
D
54
53
53
39
D
40
41
42
1
43
3
44
D
1
2
3
4
D
6
1
2
3
4
D
7
6
10
5
5
6
11
H
8
12
13
D
17
52
H
57
15
16
18
17
15
16
14
17
18
57
15
16
D

WWW.WOBIS.PL

| Pos. | Part no. | Description | Qty. | Notice | Add. notice | kg | EA | TA | DA | dDPW | List price |
|---|---|---|---|---|---|---|---|---|---|---|---|
| 1 | 03794100 | WASHER | 2 | 10,1 x 22 x 3 | | 0,006 | 1 | 11 | 1 | | |
| 2 | 03794300 | CAM FOLLOWER | 2 | | | 0,041 | 1 | 11 | 1 | | |
| 3 | 03794201 | CAM FOLLOW SPINDLE | 2 | | | 0,018 | 1 | 11 | 1 | | |
| 4 | 50051000 | ALL.SCR.M 6X 30 | 2 | M 6 x 30 DIN 912-8.8 | | 0,009 | 4 | 11 | 1 | | |
| 5 | 03795800 | O-RING 12X18,3X7,3 | 2 | 12 x 18,3 x 7,3 | | 0,002 | 1 | 11 | 1 | | |
| 6 | 50329000 | O-RING 9,5X2,5 | 3 | 9,5 x 2,5 | | 0,001 | 4 | 11 | 1 | | |
| 7 | 03795100 | O-RING265X269,4X3,6 | 1 | 265 x 269,4 x 3,6 | | 0,013 | 1 | 11 | 1 | | |
| 8 | 01270300 | PLATE | 1 | | | 2,430 | 1 | 12 | 1 | | |
| 10 | 50417600 | ALL.SCR. M 8X25 Z4 | 22 | M 8 x 25 Z4 DIN 912-8.8 A3C | | 0,015 | 4 | 11 | 1 | | |
| 11 | 04023300 | HOUSING | 1 | | | 0,110 | 1 | 11 | 1 | | |
| 12 | 03795000 | SUCTION SIEVE | 1 | | | 0,010 | 1 | 11 | 1 | | |
| 13 | 50051100 | ALL.SCR.M 6X 30 | 2 | M 6 x 30 DIN 6912-8.8 | | 0,007 | 4 | 11 | 1 | | |
| 14 | 01255410 | OIL SUMP | 1 | | | 0,612 | 1 | 11 | 1 | | |
| 15 | 50170900 | SPRING WASHER 6 | 12 | 6 DIN 128 - A3C | | 0,001 | 4 | 11 | 1 | | |
| 16 | 50329100 | ALL.SCR.M 6X10 | 12 | M 6x10 DIN 912-8.8 Inbus Plus | | 0,005 | 4 | 11 | 1 | | |
| 17 | 50001600 | JOINT A22 X27 | 2 | A 22 x 27 DIN 7603 Cu | | 0,002 | 4 | 11 | 1 | | |
| 18 | 50140400 | DRAIN PLUG AM22X1,5 | 0... 2 | AM22x1,5DIN7604-5.8A3C | | 0,037 | 4 | 11 | 1 | | |
| 18 | 50373100 | DRAIN PLG.MAGNT.M22 | 0... 2 | AM22x1,5DIN7604A3C MAGN. | | 0,038 | 4 | 11 | 1 | | |
| 20 | 03794700 | COVER | 1 | | | 0,118 | 9 | 11 | 0 | | |
| 21 | 50328300 | HEXAGON NUT VM6 | 3 | VM 6 DIN 980-8 A3C | | 0,002 | 4 | 11 | 1 | | |
| 22 | 01321200 | CLOS.SCREW + SIEVE | 1 | M 24 x 1,5 | | 0,052 | 1 | 11 | 1 | | |
| 23 | 50286400 | JOINT A24X29 | 1 | A 24 x 29 DIN 7603-Cu | | 0,003 | 4 | 11 | 1 | | |
| 24 | 01321100 | OIL RELIEF VALVE | 1 | | | 0,028 | 1 | 11 | 1 | | |
| 25 | _noorder | No single order | - | | | | | | | | |
| 26 | 50460400 | O-RING 18 X 2 | 1 | 18 x 2 | | 0,001 | 4 | 11 | 1 | | |
| 27 | 50062400 | JOINT A10 X13,5 | 2 | A 10 x 13,5 DIN 7603-Cu | | 0,001 | 4 | 11 | 1 | | |
| 28 | 50062300 | CLOS.SCREW M10X1 | 2 | M 10 x 1 DIN 908-5.8 A3C | | 0,005 | 4 | 11 | 1 | | |
| 29 | 01255200 | DIPSTICK | 1 | | | 0,030 | 1 | 11 | 1 | | |
| 30 | _noorder | No single order | - | | | | | | | | |
| 31 | 50359700 | O-RING 20,29X2,62 | 2 | 20,29 x 2,62 | | 0,001 | 4 | 11 | 1 | | |

WWW.WOBIS.PL

| Pos. | Part no. | Description | Qty. | Notice | Add. notice | kg | EA | TA | DA | dDPW | List price |
|---|---|---|---|---|---|---|---|---|---|---|---|
| 32 | 50329200 | RECTANG.RNG.50X55X3 | 2 | 50 x 55 x 3 | | 0,002 | 4 | 11 | 1 | | |
| 33 | _noorder | No single order | - | | | | | | | | |
| 34 | 50081200 | SPRING WASHER A 6 | 4 | A 6 DIN 137 - A3C | | 0,001 | 4 | 11 | 1 | | |
| 35 | 50170600 | ALL.SCR.M 6X 20 | 4 | M 6 x 20 DIN 912-8.8 A3C | | 0,007 | 4 | 11 | 1 | | |
| 36 | 01480000 | OILFILT.ELEM.1D.... | 1 | | | 0,060 | 4 | 12 | 1 | | |
| 37 | _noorder | No single order | - | | | | | | | | |
| 38 | 04033401 | COVER | 1 | | | 0,105 | 1 | 11 | 1 | | |
| 39 | 04053210 | SET SCREW M 9 | 1 | | | 0,020 | 9 | 11 | 0 | | |
| 40 | 04036921 | PLATE | 1 | | | 0,040 | 9 | 11 | 0 | | |
| 41 | 04024221 | CAM FOLLOWER BRACK. | 1 | | | 0,132 | 9 | 11 | 0 | | |
| 42 | 04062110 | ALL.SCR.M 9X36 | 1 | M 9 x 36 | | 0,015 | 0 | 11 | 0 | | |
| 43 | 04024301 | CAM FOLLOWER T/U | 1 | | | 0,040 | 9 | 11 | 0 | | |
| 44 | 50457900 | ALL.SCR. M 6X 25 | 1 | M 6 x 25 DIN 912 - 10.9 | | 0,007 | 4 | 11 | 1 | | |
| 45 | _nopart | Not in this engine | - | | | | | | | | |
| 46 | 03550500 | DRAIN EXTENTION | 1 | 116 mm | | 0,265 | 1 | 11 | 1 | | |
| 47 | 50001400 | JOINT A18 X22 | 1 | A 18 x 22 DIN 7603 - Cu | | 0,002 | 4 | 11 | 1 | | |
| 48 | 50044200 | CLOS.SCREW M18X1,5 | 1 | M 18 x 1,5 DIN 910 | | 0,047 | 4 | 11 | 1 | | |
| 49 | 50434300 | STUD M 8X 18 | 2 | M 6 x 20 DIN 939-8.8 "C" | | 0,009 | 4 | 11 | 1 | | |
| 50 | 50050700 | ALL.SCR.M 6X 16 | 8 | M 6 x 16 DIN 912-8.8 | | 0,005 | 4 | 11 | 1 | | |
| 51 | 50144500 | FLAT WASHER 6,4 | 12 | 6,4 DIN 125-St A3C | | 0,001 | 4 | 11 | 1 | | |
| 52 | 50140400 | DRAIN PLUG AM22X1,5 | 1 | AM22x1,5DIN7604-5.8A3C | | 0,037 | 4 | 11 | 1 | | |
| 53 | 04069600 | SHIM 1,2 | 0... 3 | 1,20 mm | | 0,002 | 1 | 11 | 1 | | |
| 53 | 04069500 | SHIM 1,05 | 0... 3 | 1,05 mm | | 0,001 | 1 | 11 | 1 | | |
| 54 | 04069800 | SHIM 1,05 | 0... 1 | 1,05 mm | | 0,001 | 9 | 11 | 0 | | |
| 54 | 04069900 | SHIM 1,20 | 0... 1 | 1,20 mm | | 0,002 | 9 | 11 | 0 | | |
| 55 | 04065400 | ALL.SCR. M 6 X 12 | 1 | M 6 X 12<br>part was replaced by 04065401 | | 0,000 | 0 | 11 | 7 | | |
| 56 | 04084000 | LIFTING SPRING | 1 | part was replaced by 04084001 | | 0,000 | 0 | 21 | 7 | | |
| 57 | 50144500 | FLAT WASHER 6,4 | 2 | 6,4 DIN 125-St A3C | | 0,001 | 4 | 11 | 1 | | |
| 58 | 50139200 | STUD M 6X 16 | 2 | M 6 x 16 DIN 939-8.8 | | 0,002 | 4 | 11 | 0 | | |

WWW.WOBIS.PL

| Pos. | Part no. | Description | Qty. | Notice | Add. notice | kg | EA | TA | DA | dDPW | List price |
|---|---|---|---|---|---|---|---|---|---|---|---|
| 59 | 05068900 | GASKET | 1 | | | 0,006 | 1 | 21 | 1 | | |
| 60 | 01318300 | LUB.OIL FILT.HOUSG. | 1 | | | 0,281 | 1 | 22 | 1 | | |
| 61 | 01248901 | COVER F.OILFILTER | 1 | | | 0,102 | 1 | 22 | 1 | | |
| D | 50223300 | LOCTITE 221 | 1 | 50 ML | | 0,077 | 4 | 12 | 0 | | |
| E | 50223400 | LOCTITE 648 | 1 | 10 ML | | 0,021 | 4 | 12 | 0 | | |
| H | 50282501 | SILICON SEALER | 1 | 30ML 1207 | | 0,055 | 4 | 12 | 1 | | |
| K | 50342600 | GREASE START.DEVICE | 1 | 100 GRAMM<br>part was replaced by 50342601 | | 0,100 | 0 | 12 | 0 | | |

WWW.WOBIS.PL

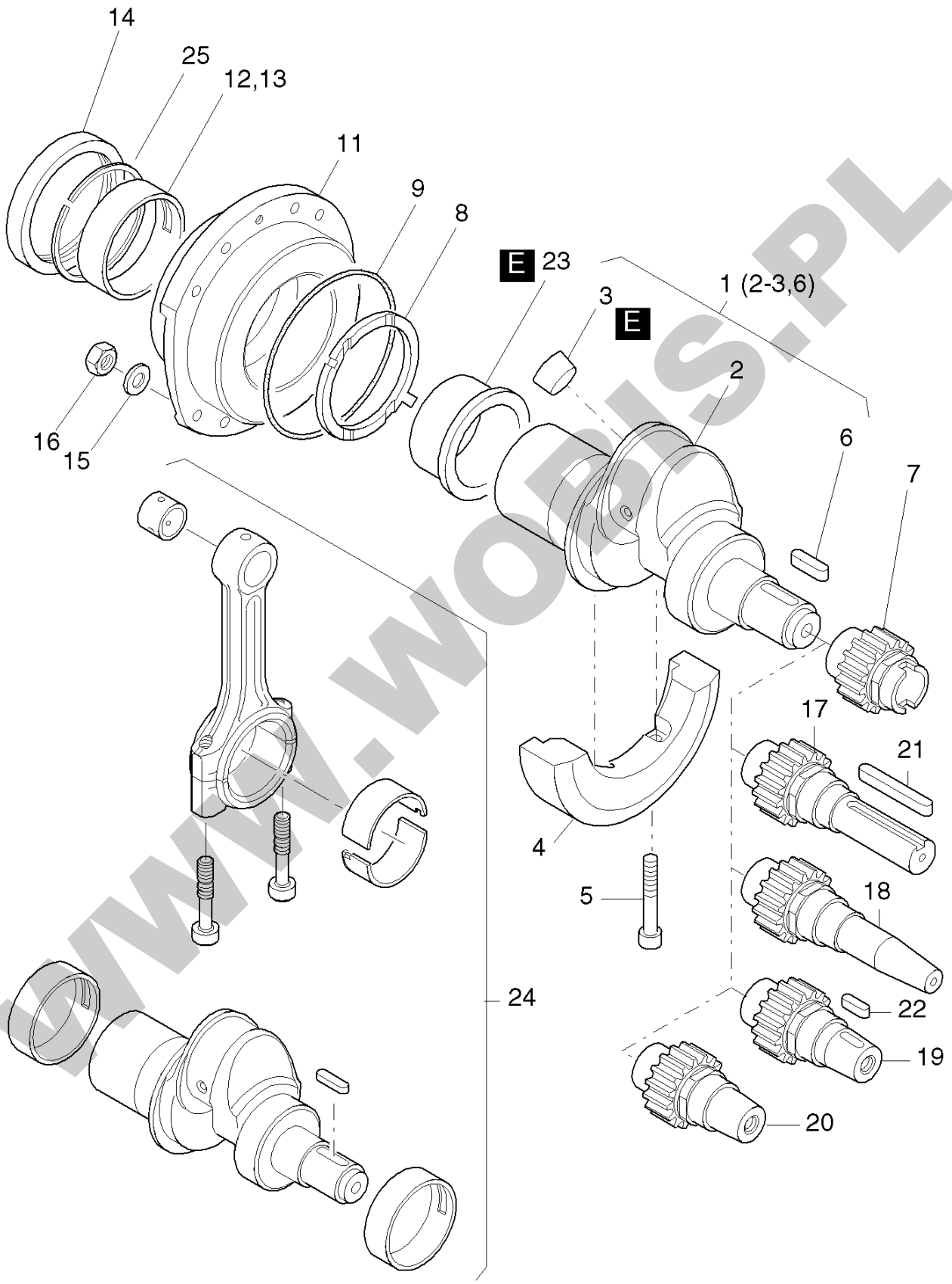


WWW.WOBIS.PL

| Pos. | Part no. | Description | Qty. | Notice | Add. notice | kg | EA | TA | DA | dDPW | List price |
|---|---|---|---|---|---|---|---|---|---|---|---|
| 1 | 01269900 | CRANKSHFT.1D30-1D41 | 1 | RE.U.LINKSLAUF<br>part was replaced by 01269910 | | 4,450 | 0 | 11 | 7 | | |
| 2 | _noorder | No single order | - | | | | | | | | |
| 3 | 50345800 | COVER 22 | 1 | 22 DIN 443 | | 0,010 | 4 | 11 | 1 | | |
| 4 | 04023501 | COUNTER WEIGHT | 1 | part was replaced by 04023502 | | 0,590 | 0 | 11 | 7 | | |
| 5 | 50127900 | ALL.SCR. M 8X 40 | 2 | M 8 x 40 DIN 912 - 10.9<br>part was replaced by 50127901 | | 0,019 | 0 | 11 | 7 | | |
| 6 | 50362600 | FITTINGKEY A 6X4X32 | 1 | A 6 x 4 x 32 DIN 6885 St 60 | | 0,006 | 4 | 11 | 1 | | |
| 7 | 03796120 | GEARWHEEL F. CRANKS | 1 | | | 0,225 | 1 | 11 | 1 | | |
| 8 | 04024600 | BUFFER RING | 1 | | | 0,012 | 1 | 11 | 1 | | |
| 9 | 50349700 | O-RING 100X2,5 | 1 | 100 x 2,5 | | 0,002 | 4 | 11 | 1 | | |
| 11 | 04136300 | BEARING FLANGE | 1 | | | 2,381 | 1 | 11 | 1 | | |
| 12 | 04024500 | MAIN BEARING | 1 | | | 0,062 | 4 | 11 | 1 | | |
| 13 | 04048700 | MAIN BEARING 0,5- | 1 | - 0,5 mm | | 0,100 | 4 | 14 | 1 | | |
| 14 | 50368101 | OIL SEAL 52 X80 X10 | 1 | 52 x 80 x 10<br>part was replaced by 50368102 | | 0,041 | 0 | 11 | 7 | | |
| 15 | 50413600 | WASHER 8,4 | 8 | 8,4 300 HV DIN 125A-A3C | | 0,001 | 4 | 11 | 1 | | |
| 16 | 50364300 | HEXAGON NUT M 8 | 8 | M 8 DIN 934 - 10.9 A3C | | 0,005 | 4 | 11 | 1 | | |
| 17 | 04023110 | STUBSHAFT SAE CYL. | 1 | SAE ...2 ø 1'' zyl., cyl. GEWINDE M 8<br>part was replaced by 04023120 | | 0,000 | 0 | 11 | 7 | | |
| 18 | 01485500 | STUBSHAFT SAE TAPER | 1 | SAE ...4 ø 1'' keg. | | 0,700 | 1 | 11 | 1 | | |
| 19 | 04022910 | STUBSHAFT ITALIA | 1 | ITAL. ...3 ø 30 mm tap. | | 0,445 | 1 | 11 | 1 | | |
| 20 | 05033200 | STUB SHAFT ITAL. 23 | 1 | ITAL. ...6 ø 23 mm con. | | 0,400 | 1 | 11 | 1 | | |
| 21 | 05141600 | FITTINGKEY 6,35X61 | 1 | A 6,35 x 61 | | 0,018 | 1 | 11 | 1 | | |
| 22 | 50017800 | WOODRUFF KEY 4X6,5 | 1 | 4 x 6,5 DIN 6888 | | 0,003 | 4 | 11 | 1 | | |
| 23 | _nopart | Not in this engine | - | | | | | | | | |
| 24 | 01511901 | REP.SET CKRS. 30-41 | 1 | part was replaced by 01511902 | | 0,000 | 0 | 12 | 7 | | |
| 25 | 50458000 | CIRCLIP SB 60 | 1 | SB 60 | | 0,005 | 4 | 11 | 1 | | |
| E | 50223400 | LOCTITE 648 | 1 | 10 ML | | 0,021 | 4 | 12 | 0 | | |
| | | | | | | | | | | | |
| | | | | | | | | | | | |
| | | | | | | | | | | | |

WWW.WOBIS.PL

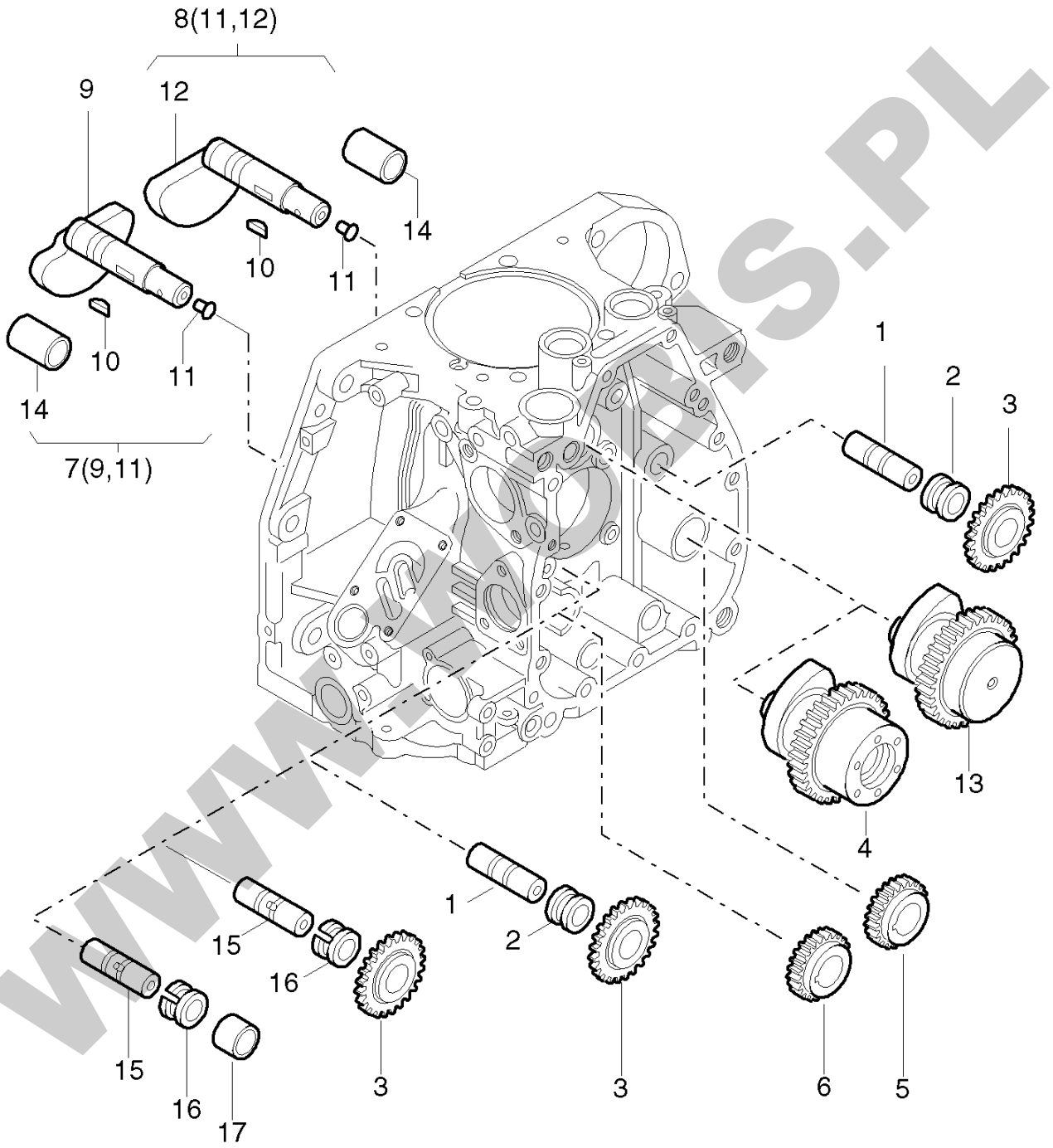


WWW.WOBIS.PL

| Pos. | Part no. | Description | Qty. | Notice | Add. notice | kg | EA | TA | DA | dDPW | List price |
|---|---|---|---|---|---|---|---|---|---|---|---|
| 1 | 03796401 | SHAFT | 2 | | | 0,072 | 1 | 11 | 1 | | |
| 2 | 03796500 | BUSH | 2 | | | 0,028 | 1 | 11 | 1 | | |
| 3 | 01242000 | GEARWHEEL | 2 | | | 0,176 | 1 | 11 | 1 | | |
| 4 | 04024010 | CAMSHAFT L | 1 | | | 1,250 | 9 | 11 | 0 | | |
| 5 | 03796800 | GEARWHEEL | 1 | Z, U, C | | 0,107 | 1 | 11 | 1 | | |
| 6 | 03796900 | GEARWHEEL | 1 | Z, U, C | | 0,107 | 1 | 11 | 1 | | |
| 7 | 01270000 | SHAFT PUMP SIDE | 1 | | | 0,493 | 1 | 12 | 0 | | |
| 8 | 01270100 | SHAFT STARTER SIDE | 1 | | | 0,493 | 1 | 12 | 0 | | |
| 9 | _noorder | No single order | - | | | | | | | | |
| 10 | 50324900 | WOODRUFF KEY 3X3,7 | 2 | 3 x 3,7 DIN 6888 St 60 Z, U, C | | 0,001 | 4 | 11 | 1 | | |
| 11 | _noorder | No single order | - | | | | | | | | |
| 12 | _noorder | No single order | - | | | | | | | | |
| 13 | 04037000 | CAMSHAFT T/U | 1 | | | 1,240 | 9 | 11 | 0 | | |
| 14 | 04023900 | BUSH | 2 | | | 0,052 | 1 | 11 | 1 | | |
| 15 | 01320700 | SHAFT | 1 | | | 0,080 | 1 | 11 | 1 | | |
| 16 | 04107600 | BUSH | 1 | | | 0,005 | 1 | 11 | 1 | | |
| 17 | 04011900 | BUSH | 1 | 15x24x17 | | 0,050 | 1 | 11 | 1 | | |

WWW.WOBIS.PL

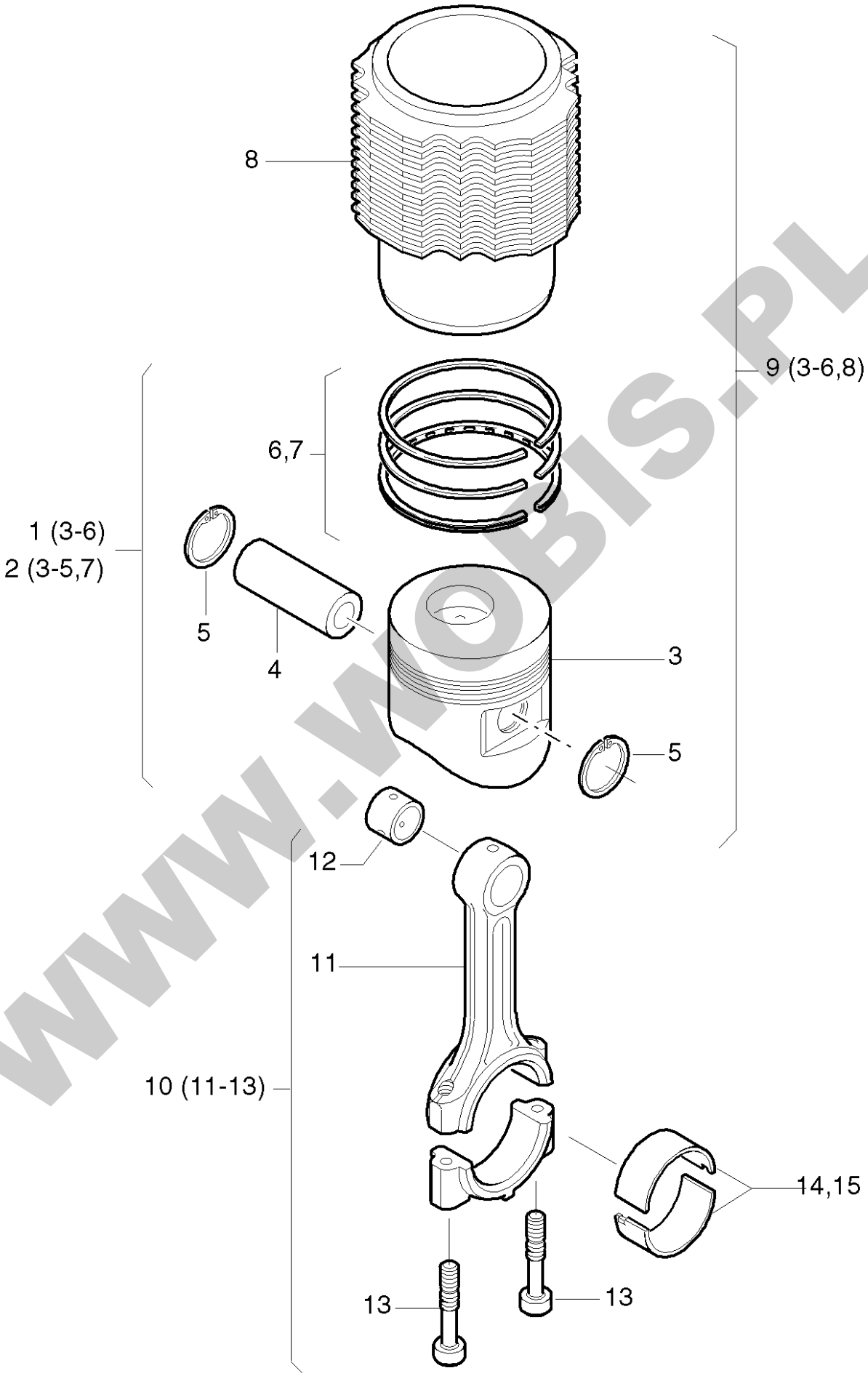


WWW.WOBIS.PL

| Pos. | Part no. | Description | Qty. | Notice | Add. notice | kg | EA | TA | DA | dDPW | List price |
|---|---|---|---|---|---|---|---|---|---|---|---|
| 1 | 01258504 | PISTON 86 | 1 | | | 0,800 | 4 | 11 | 0 | | |
| 2 | 01264904 | PISTON 86 + 0,5 | 1 | part was replaced by 01280401 | | 0,800 | 9 | 14 | 0 | | |
| 2 | 01269404 | PISTON 86 + 1,0 | 1 | part was replaced by 01280401 | | 0,800 | 0 | 14 | 7 | | |
| 3 | _noorder | No single order | - | | | | | | | | |
| 4 | 50363200 | GUDGEON PIN 25X62 | 1 | 25 x 13 x 62 DIN 73126-B2 | | 0,150 | 4 | 13 | 0 | | |
| 5 | 50381210 | CIRCLIP 25 X 1,2 | 2 | A 25 x 1,2 | | 0,001 | 4 | 13 | 1 | | |
| 6 | 01258603 | PISTON RING SET 86 | 1 | 86 | | 0,050 | 4 | 13 | 0 | | |
| 7 | 01267803 | PIST.RING SET86+0,5 | 1 | 86 +0,5 | | 0,050 | 4 | 14 | 0 | | |
| 7 | 01273603 | PIST.RING SET86+1,0 | 1 | 86 +1,0 | | 0,050 | 4 | 14 | 0 | | |
| 8 | _noorder | No single order | - | | | | | | | | |
| 9 | 01280401 | CYLINDER W. PISTON | 1 | | | 3,120 | 1 | 12 | 0 | | |
| 10 | 01258302 | CONROD | 1 | | | 0,590 | 1 | 11 | 1 | | |
| 11 | _noorder | No single order | - | | | | | | | | |
| 12 | 04065600 | BUSH FOR CONROD | 1 | | | 0,015 | 4 | 12 | 1 | | |
| 13 | 04100500 | CONROD SCREW | 2 | | | 0,025 | 1 | 11 | 1 | | |
| 14 | 04026500 | BIG END BEARING | 1 | | | 0,035 | 4 | 11 | 1 | | |
| 15 | 04065700 | BIG END BEAR.0,5- | 1 | - 0,5 mm | | 0,040 | 4 | 14 | 1 | | |

WWW.WOBIS.PL

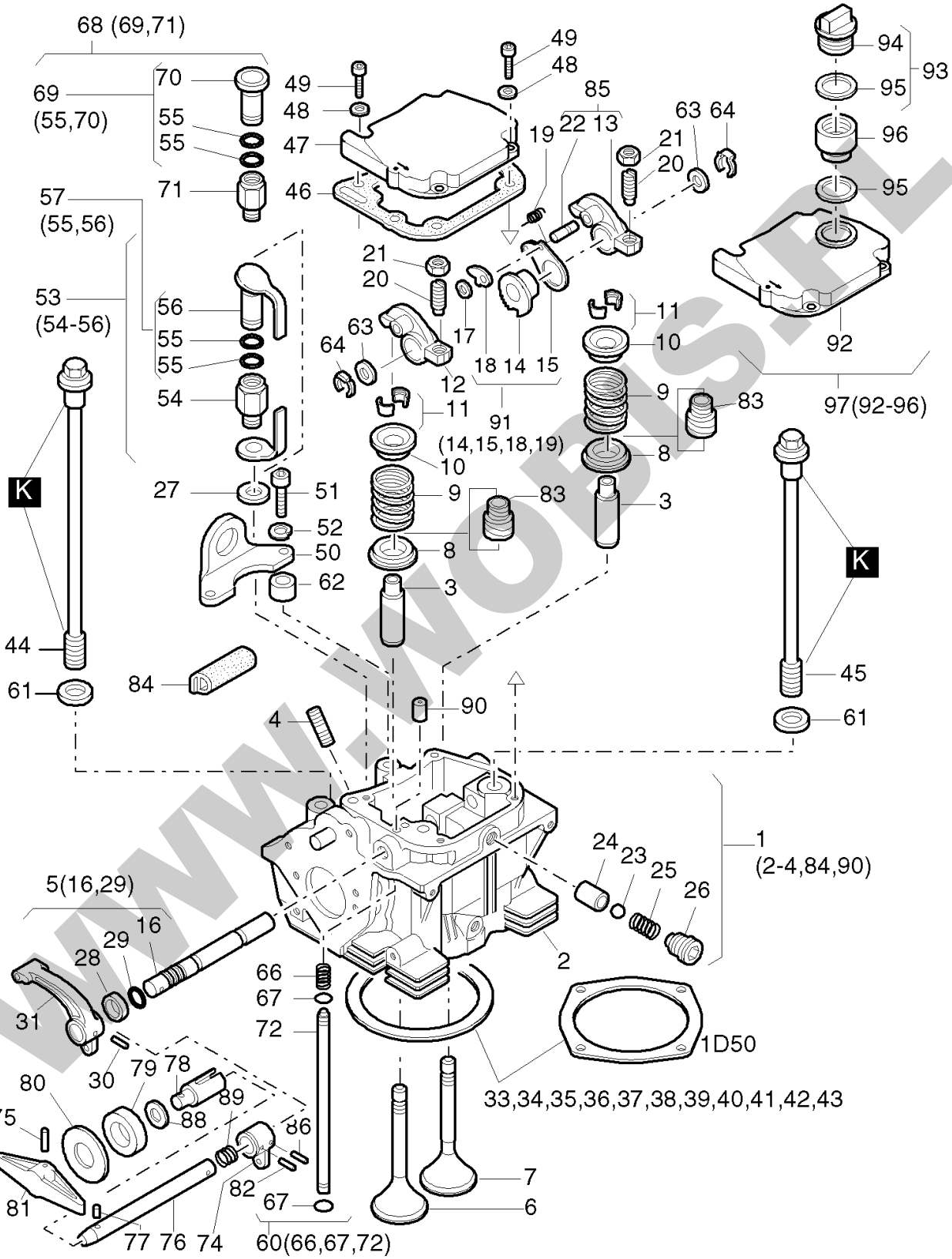
68 (69,71)
69 (55,70)
70
55
55
71
57 (55,56)
53 (54-56)
56
55
55
54
K
27
51
52
50
62
44
61
84
49
48
47
46
49
48
85
22 13
19
21
20
63 64
21
20
17
18 14 15
63
64
12
11
91 (14,15,18,19)
10
9
83
8
3
4
90
5(16,29)
16
29
28
31
30
79 78
89
88
80
75
86
82
81
77 76 74
67
60(66,67,72)
66
67
72
7
6
1
(2-4,84,90)
24 23 25 26
2
1D50
33,34,35,36,37,38,39,40,41,42,43
94
95
93
96
95
92
97(92-96)
11
10
9
83
8
3
K
45
61

WWW.WOBIS.PL

| Pos. | Part no. | Description | Qty. | Notice | Add. notice | kg | EA | TA | DA | dDPW | List price |
|---|---|---|---|---|---|---|---|---|---|---|---|
| 1 | 01272410 | CYLINDER HEAD | 1 | | | 2,630 | 1 | 12 | 0 | | |
| 2 | _noorder | No single order | - | | | | | | | | |
| 3 | 04028711 | VALVE GUIDE | 2 | | | 0,029 | 4 | 12 | 0 | | |
| 4 | 50279200 | STUD M 8X 40 | 1 | M 8 x 40 DIN 835-8.8 A3C | | 0,019 | 4 | 11 | 1 | | |
| 5 | 01290910 | ROCKER SHAFT "C" | 1 | | | 0,110 | 1 | 11 | 0 | | |
| 6 | 04028900 | VALVE INLET | 1 | | | 0,063 | 9 | 11 | 0 | | |
| 7 | 04029000 | VALVE EXHAUST | 1 | | | 0,057 | 9 | 11 | 0 | | |
| 8 | 04005201 | WASHER | 2 | | | 0,015 | 1 | 11 | 1 | | |
| 9 | 04029300 | VALVE SPRING | 2 | | | 0,026 | 1 | 11 | 1 | | |
| 10 | 04029201 | CUP | 2 | | | 0,020 | 1 | 11 | 1 | | |
| 11 | 03171910 | COLLET | 2 | | | 0,002 | 1 | 11 | 1 | | |
| 12 | 04003710 | ROCKER INLET | 1 | | | 0,055 | 1 | 11 | 1 | | |
| 13 | _noorder | No single order | - | | | | | | | | |
| 14 | _noorder | No single order | - | | | | | | | | |
| 15 | 03778401 | SPRING SHEET | 1 | | | 0,002 | 1 | 11 | 1 | | |
| 16 | _noorder | No single order | - | | | | | | | | |
| 17 | 50117200 | CIRCLIP | 1 | RA 4ME DIN 6799 | | 0,001 | 4 | 11 | 1 | | |
| 18 | 03365710 | RATCHET F.DECOMPR. | 1 | | | 0,004 | 1 | 11 | 1 | | |
| 19 | 03366001 | SPRING | 1 | | | 0,001 | 1 | 11 | 1 | | |
| 20 | 03783000 | ADJUSTING SCREW | 2 | | | 0,008 | 1 | 11 | 1 | | |
| 21 | 03173100 | HEXAGON NUT | 2 | | | 0,004 | 1 | 11 | 1 | | |
| 22 | _noorder | No single order | - | | | | | | | | |
| 23 | 50123800 | BALL 7 MM G100 | 1 | 7 mm III DIN 5401 | | 0,001 | 4 | 11 | 1 | | |
| 24 | 04004700 | BUSH | 1 | | | 0,016 | 1 | 11 | 1 | | |
| 25 | 04004800 | PRESSURE SPRING | 1 | | | 0,003 | 1 | 11 | 1 | | |
| 26 | 01245200 | ADJUSTING SCREW | 1 | | | 0,005 | 1 | 11 | 1 | | |
| 27 | 50001100 | JOINT A12 X15,5 | 1 | A 12 x 15,5 DIN 7603-Cu | | 0,001 | 4 | 11 | 1 | | |
| 28 | _nopart | Not in this engine | - | | | | | | | | |
| 29 | 40022401 | O-RING 8 X 2 GRAY | 1... 2 | 8 x 2 FPM 75 MOLYKOT. | | 0,002 | 4 | 11 | 1 | | |
| 30 | 50034700 | PIN 4 X22 | 1 | 4 x 22 ISO 8752-ST | | 0,002 | 4 | 11 | 1 | | |

WWW.WOBIS.PL

| Pos. | Part no. | Description | Qty. | Notice | Add. notice | kg | EA | TA | DA | dDPW | List price |
|---|---|---|---|---|---|---|---|---|---|---|---|
| 31 | 04009810 | HANDLE | 1 | | | 0,015 | 1 | 11 | 1 | | |
| 33 | 04056700 | GASK.F.CYL.HEAD 0,3 | 0... 1 | | | 0,008 | 1 | 11 | 0 | | |
| 34 | 04056800 | GASK.F.CYL.HEAD 0,4 | 0... 1 | | | 0,010 | 9 | 11 | 0 | | |
| 35 | 04027300 | GASK.F.CYL.HEAD 0,5 | 0... 1 | | | 0,011 | 9 | 11 | 0 | | |
| 36 | 04027400 | GASK.F.CYL.HEAD 0,6 | 0... 1 | | | 0,013 | 1 | 11 | 0 | | |
| 37 | 04027500 | GASK.F.CYL.HEAD 0,7 | 0... 1 | | | 0,015 | 9 | 11 | 0 | | |
| 38 | 04027600 | GASK.F.CYL.HEAD 0,8 | 0... 1 | | | 0,017 | 1 | 11 | 0 | | |
| 39 | 04027700 | GASK.F.CYL.HEAD 0,9 | 0... 1 | | | 0,019 | 9 | 11 | 0 | | |
| 40 | 04027800 | GASK.F.CYL.HEAD 1,0 | 0... 1 | | | 0,021 | 9 | 11 | 0 | | |
| 41 | 04027900 | GASK.F.CYL.HEAD 1,1 | 0... 1 | | | 0,023 | 9 | 11 | 0 | | |
| 42 | 04028000 | GASK.F.CYL.HEAD 1,2 | 0... 1 | | | 0,026 | 9 | 11 | 0 | | |
| 43 | 04028100 | GASK.F.CYL.HEAD 1.3 | 0... 1 | | | 0,028 | 9 | 11 | 0 | | |
| 44 | 04028600 | CYL.HEAD SCREW251MM | 2 | 251,5 mm | | 0,152 | 1 | 11 | 1 | | |
| 45 | 04028500 | CYL.HEAD SCREW174MM | 2 | 174 mm | | 0,093 | 1 | 11 | 1 | | |
| 46 | 04006111 | GASKET | 1 | | | 0,003 | 1 | 11 | 1 | | |
| 47 | 01245413 | COVER CYL.HEAD | 1 | | | 0,245 | 1 | 11 | 5 | | |
| 48 | 50081200 | SPRING WASHER A 6 | 4 | A 6 DIN 137 - A3C | | 0,001 | 4 | 11 | 1 | | |
| 49 | 50170800 | ALL.SCR.M 6X 25 | 4 | M 6 x 25 DIN 912 - 8.8 A3C | | 0,008 | 4 | 11 | 1 | | |
| 50 | 04008100 | LIFTING BRACKET | 1 | | | 0,071 | 1 | 11 | 1 | | |
| 51 | 50175900 | ALL.SCR.M 8X 30 | 2 | M 8 x 30 DIN 912-8.8 A3C | | 0,017 | 4 | 11 | 1 | | |
| 52 | 50208500 | SPRING WASHER 8 | 2 | 8 DIN 128 A3C | | 0,001 | 4 | 11 | 1 | | |
| 53 | 01493200 | OIL FIL.DEV."S"46MM | 1 | | | 0,080 | 1 | 12 | 1 | | |
| 54 | _noorder | No single order | - | | | | | | | | |
| 55 | 40081700 | 0-RING 12 X 16X 2 | 2 | 12 x 2 | | 0,001 | 4 | 11 | 1 | | |
| 56 | _noorder | No single order | - | | | | | | | | |
| 57 | 01308300 | CLOSG.PLUG "S"46MM | 1 | part was replaced by 01308301 | | 0,012 | 0 | 11 | 7 | | |
| 60 | 01269601 | OIL PRESSURE PIPE | 1 | | | 0,033 | 1 | 11 | 1 | | |
| 61 | 03794100 | WASHER | 4 | 10,1 x 22 x 3 | | 0,006 | 1 | 11 | 1 | | |
| 62 | 04008000 | BUSH 9,2X17,2X10 | 2 | 9,2 x 17,2 x 10 | | 0,013 | 1 | 11 | 1 | | |
| 63 | 03457500 | DISC F.STUD | 2 | 12,5 x 24 x 2,5 | | 0,006 | 1 | 11 | 1 | | |

WWW.WOBIS.PL

| Pos. | Part no. | Description | Qty. | Notice | Add. notice | kg | EA | TA | DA | dDPW | List price |
|---|---|---|---|---|---|---|---|---|---|---|---|
| 64 | 50353300 | CIRCLIP KL14S | 2 | | | 0,002 | 4 | 11 | 1 | | |
| 66 | 04004200 | PRESSURE SPRING | 1 | | | 0,001 | 1 | 11 | 1 | | |
| 67 | 50330100 | O-RING 4X 1,2 | 2 | 4 x 1,2 | | 0,001 | 4 | 11 | 1 | | |
| 68 | 01280600 | OIL FILLER DEVICE | 1 | | | 0,080 | 1 | 12 | 1 | | |
| 69 | 01275610 | CLOSG.PLUG "C" 46MM | 1 | part was replaced by 01275611 | | 0,016 | 0 | 11 | 7 | | |
| 70 | _noorder | No single order | - | | | | | | | | |
| 71 | _noorder | No single order | - | | | | | | | | |
| 72 | _noorder | No single order | - | | | | | | | | |
| 74 | 04047920 | INTERM.PIECE DECOMP | 1 | | | 0,035 | 1 | 21 | 4 | | |
| 75 | 50132000 | ROLL PIN 4X16 | 1 | 4 x 16 ISO 8752-ST | | 0,002 | 4 | 11 | 1 | | |
| 76 | 04083320 | DECOMPRESSION SHAFT | 1 | | | 0,055 | 1 | 21 | 4 | | |
| 77 | 50034500 | PIN 4 X14 | 1 | 4 x 14 ISO 8752-ST | | 0,001 | 4 | 11 | 4 | | |
| 78 | 04048110 | INTERMEDIATE PIECE | 1 | | | 0,022 | 1 | 21 | 4 | | |
| 79 | 01581600 | DOUBLE SEALG.RINGS | 1 | | | 0,002 | 1 | 21 | 4 | | |
| 80 | 04048000 | WASHER 10,5X50X1,0 | 1 | 10,5x50x1,0 | | 0,002 | 1 | 21 | 4 | | |
| 81 | 03778200 | HANDLE | 1 | | | 0,010 | 1 | 21 | 4 | | |
| 82 | 50132000 | ROLL PIN 4X16 | 1 | 4 x 16 ISO 8752-ST | | 0,002 | 4 | 11 | 1 | | |
| 83 | 50405700 | VALVE STEM SEAL CAP | 2 | | | 0,002 | 4 | 11 | 1 | | |
| 84 | 04070400 | SEALING STRIP | 1 | 60 mm | | 0,010 | 9 | 11 | 0 | | |
| 85 | 01285010 | ROCKER EXHAUST | 1 | | | 0,065 | 1 | 12 | 1 | | |
| 86 | 50034600 | PIN 4 X18 | 1 | 4 x 18 ISO 8752-ST | | 0,002 | 4 | 11 | 4 | | |
| 88 | 03787300 | SHIM 0,2 | 1 | 10,5 x 21 x 0,2 | | 0,001 | 1 | 11 | 1 | | |
| 89 | 04097200 | PRES.SPRING DECOMPR | 1 | | | 0,001 | 1 | 21 | 4 | | |
| 90 | 04038500 | PLUG | 1 | | | 0,001 | 1 | 11 | 0 | | |
| 91 | 01557600 | GEARWHEEL F.DECOMPR | 1 | | | 0,040 | 1 | 12 | 1 | | |
| 92 | 01286610 | COVER F. CYL.HEAD | 1 | part was replaced by 01286611 | | 0,230 | 0 | 21 | 7 | | |
| 93 | 01613100 | CAP SCREW | 1 | | | 0,017 | 1 | 11 | 1 | | |
| 94 | _noorder | No single order | - | | | | | | | | |
| 95 | 04125000 | SEALING RING | 1 | 26 x 35 x3 | | 0,002 | 1 | 11 | 1 | | |
| 96 | 03658400 | INTERMEDIATE PIECE | 1 | | | 0,030 | 1 | 11 | 4 | | |

WWW.WOBIS.PL

| Pos. | Part no. | Description | Qty. | Notice | Add. notice | kg | EA | TA | DA | dDPW | List price |
|---|---|---|---|---|---|---|---|---|---|---|---|
| 97 | _nopart | Not in this engine | - | | | | | | | | |
| K | 50342600 | GREASE START.DEVICE | 1 | 100 GRAMM<br>part was replaced by 50342601 | | 0,100 | 0 | 12 | 0 | | |

WWW.WOBIS.PL

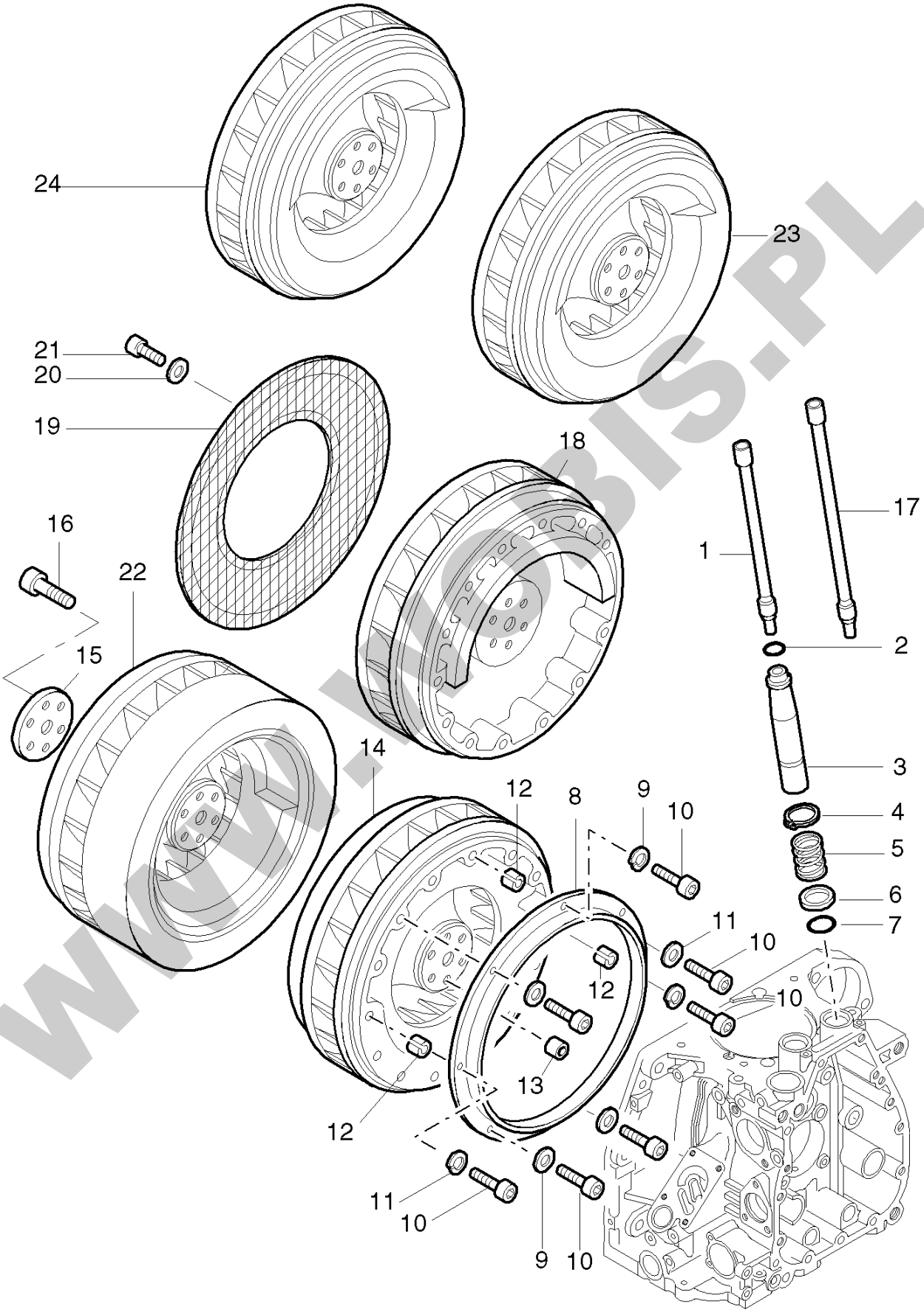


WWW.WOBIS.PL

| Pos. | Part no. | Description | Qty. | Notice | Add. notice | kg | EA | TA | DA | dDPW | List price |
|---|---|---|---|---|---|---|---|---|---|---|---|
| 1 | 01259310 | PUSHROD | 2 | | | 0,048 | 1 | 11 | 1 | | |
| 2 | 50330200 | O-RING 19X3 N | 2 | 19 x 3 | | 0,001 | 4 | 11 | 1 | | |
| 3 | 04027200 | PROTECTION TUBE | 2 | | | 0,064 | 1 | 11 | 1 | | |
| 4 | 50347000 | CIRCLIP AS 24X1,75 | 2 | AS 24 x 1,75 DIN 471 | | 0,002 | 4 | 11 | 1 | | |
| 5 | 04002600 | PRESSURE SPRING | 2 | | | 0,015 | 1 | 11 | 1 | | |
| 6 | 04002000 | PRESSURE RING | 2 | | | 0,003 | 1 | 11 | 1 | | |
| 7 | 50411300 | O-RING 23X3,5 GREEN | 2 | 23 x 3,5 grün, green, vert, verde | | 0,002 | 4 | 11 | 1 | | |
| 8 | 04030601 | RING F.FLYWHEEL | 1 | | | 0,140 | 1 | 11 | 1 | | |
| 9 | 50147200 | FLAT WASHER 4,3 | 3 | 4,3 DIN 125 - A3C | | 0,001 | 4 | 11 | 1 | | |
| 10 | 50327300 | ALL.SCR.M 4X 20 | 6 | M 4 x 20 DIN 912 - 8.8 A3C | | 0,003 | 4 | 11 | 1 | | |
| 11 | 50002600 | SPRING WASHER 5 | 3 | 5 DIN 128 - A3C | | 0,001 | 4 | 11 | 1 | | |
| 12 | 50327400 | PIN 5X10 | 3 | 5 x 10 DIN 7346 | | 0,001 | 4 | 11 | 1 | | |
| 13 | 04033000 | BUSH | 1 | | | 0,004 | 1 | 11 | 1 | | |
| 14 | 04026110 | FLYWHEEL L | 1 | IMT 98584 | | 0,000 | 0 | 11 | 7 | | |
| 15 | 04026600 | RETAINING PLATE | 1 | | | 0,020 | 1 | 11 | 1 | | |
| 16 | 50132800 | ALL.SCR. M 10X 40 | 6 | M 10 x 40 DIN 912 - 10.9 | | 0,032 | 4 | 11 | 1 | | |
| 17 | 01263610 | PUSHROD T/U | 1 | | | 0,058 | 1 | 11 | 0 | | |
| 18 | 04037210 | FLYWHEEL R | 1 | | | 11,480 | 9 | 11 | 0 | | |
| 19 | 01301200 | PROTECTION SCREEN | 1 | | | 0,120 | 9 | 11 | 0 | | |
| 20 | 50144500 | FLAT WASHER 6,4 | 6 | 6,4 DIN 125-St A3C | | 0,001 | 4 | 11 | 1 | | |
| 21 | 50025400 | HEXSCREW M 6X 10 | 6 | M 6 x 10 DIN 933 - 8.8 A3C | | 0,004 | 4 | 11 | 1 | | |
| 22 | 04079900 | FLYWHEEL HEAVY | 1 | Schwungrad schwer<br>part was replaced by 04079901 | | 0,000 | 0 | 21 | 7 | | |
| 23 | _nopart | Not in this engine | - | | | | | | | | |
| 24 | _nopart | Not in this engine | - | | | | | | | | |
| | | | | | | | | | | | |
| | | | | | | | | | | | |
| | | | | | | | | | | | |
| | | | | | | | | | | | |
| | | | | | | | | | | | |
| | | | | | | | | | | | |

WWW.WOBIS.PL

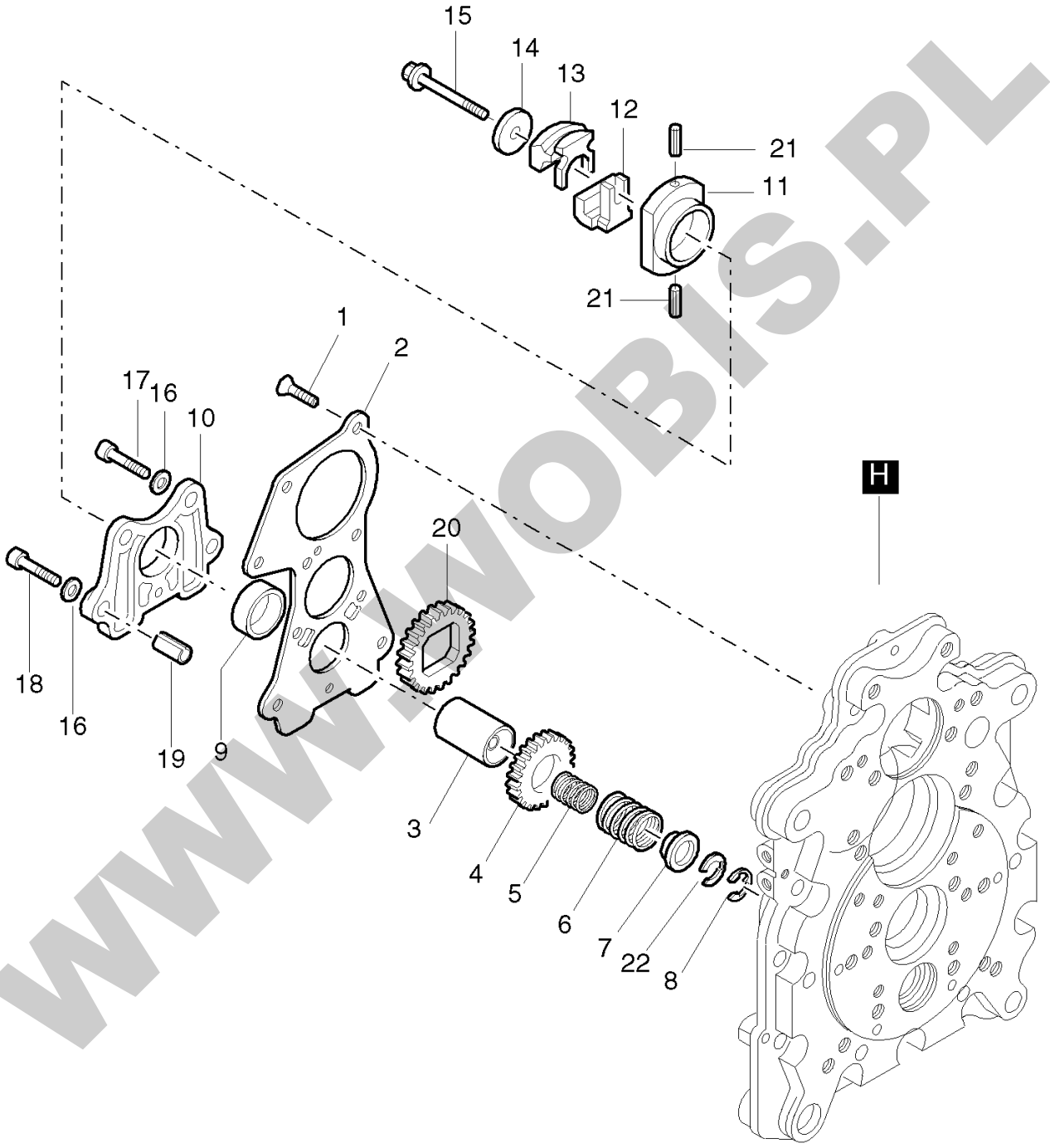


WWW.WOBIS.PL

| Pos. | Part no. | Description | Qty. | Notice | Add. notice | kg | EA | TA | DA | dDPW | List price |
|---|---|---|---|---|---|---|---|---|---|---|---|
| 1 | 50328000 | CTR.SUNK SCR.AM6X16 | 5 | AM 6 x 16 17065 - 8.8 Zn | | 0,004 | 4 | 11 | 1 | | |
| 2 | 03797412 | COVER F. OIL PUMP | 1 | | | 0,226 | 1 | 11 | 1 | | |
| 3 | 01242401 | SPRING CAPSULE+BUSH | 1 | | | 0,090 | 1 | 11 | 1 | | |
| 4 | 03797310 | GEARWHEEL | 1 | | | 0,056 | 1 | 11 | 1 | | |
| 5 | 04052800 | GOVERNOR SPRING 1,6 | 0... 1 | ø 1,6 mm ... 1500 min-1 | | 0,006 | 1 | 11 | 1 | | |
| 5 | 04008801 | GOVERNOR SPRING 1,9 | 0... 1 | ø 1,9 mm 1801...2300 min-1 | | 0,006 | 1 | 11 | 1 | | |
| 5 | 04052900 | GOVERNOR SPRING 1,7 | 0... 1 | ø 1,7 mm 1501...1800 min-1 | | 0,006 | 1 | 11 | 1 | | |
| 6 | 04008902 | GOVERNOR SPRING | 0... 1 | | | 0,020 | 1 | 11 | 1 | | |
| 6 | 04070800 | GOVERNOR SPRING 2,6 | 0... 1 | ø 2,6 mm 2301...2500 min-1 | | 0,015 | 1 | 11 | 1 | | |
| 7 | 03798600 | CUP | 1 | | | 0,005 | 1 | 11 | 1 | | |
| 8 | 50334700 | CIRCLIP 5 | 1 | 5 ME DIN 6799 | | 0,001 | 4 | 11 | 1 | | |
| 9 | 03797600 | BEARING BUSH | 1 | | | 0,009 | 9 | 11 | 0 | | |
| 10 | 03797510 | HOUSING FOR OILPUMP | 1 | part was replaced by 01869300 | | 0,078 | 0 | 11 | 0 | | |
| 11 | 03797701 | PLATE CENTRIF.WEIGH | 1 | | | 0,085 | 1 | 11 | 1 | | |
| 12 | 03798002 | CENTRIFUGAL WEIGHT | 1 | | | 0,056 | 1 | 11 | 5 | | |
| 13 | 03798102 | CENTRIFUGAL WEIGHT | 1 | | | 0,055 | 1 | 11 | 5 | | |
| 14 | 03797900 | WASHER | 1 | | | 0,008 | 1 | 11 | 1 | | |
| 15 | 03797801 | PIN | 1 | | | 0,016 | 1 | 11 | 1 | | |
| 16 | 50081200 | SPRING WASHER A 6 | 5 | A 6 DIN 137 - A3C | | 0,001 | 4 | 11 | 1 | | |
| 17 | 50170800 | ALL.SCR.M 6X 25 | 3 | M 6 x 25 DIN 912 - 8.8 A3C | | 0,008 | 4 | 11 | 1 | | |
| 18 | 50051000 | ALL.SCR.M 6X 30 | 2 | M 6 x 30 DIN 912-8.8 | | 0,009 | 4 | 11 | 1 | | |
| 19 | 50084901 | PIN 8 X 12 | 2 | 8 x 12 DIN 7346 55 Si 7 2Fasen | | 0,003 | 4 | 11 | 1 | | |
| 20 | 03798720 | GEARWHEEL | 1 | | | 0,061 | 1 | 11 | 1 | | |
| 21 | 50260501 | ROLL PIN 2X10 | 2 | 2 x 10 ISO 8752-ST | | 0,001 | 4 | 11 | 1 | | |
| 22 | 04046000 | CIRCLIP 0,5 | 0... 3 | 0,5 mm | | 0,001 | 1 | 11 | 1 | | |
| H | 50282501 | SILICON SEALER | 1 | 30ML 1207 | | 0,055 | 4 | 12 | 1 | | |
| | | | | | | | | | | | |
| | | | | | | | | | | | |
| | | | | | | | | | | | |
| | | | | | | | | | | | |

WWW.WOBIS.PL

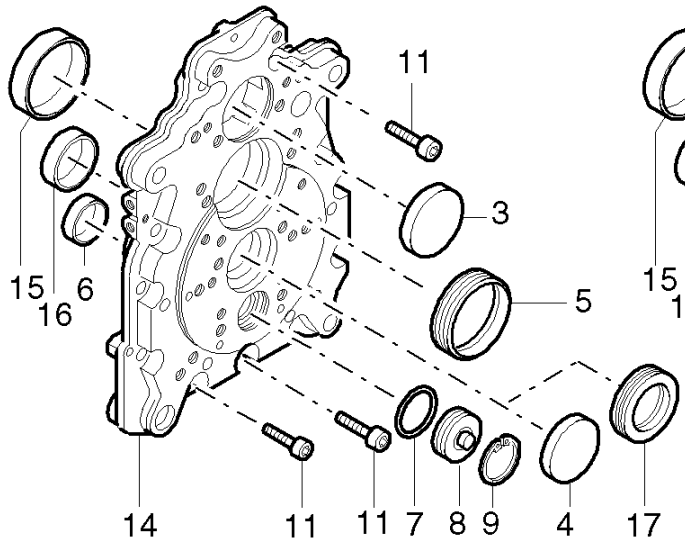


2 (3-6,14-17)

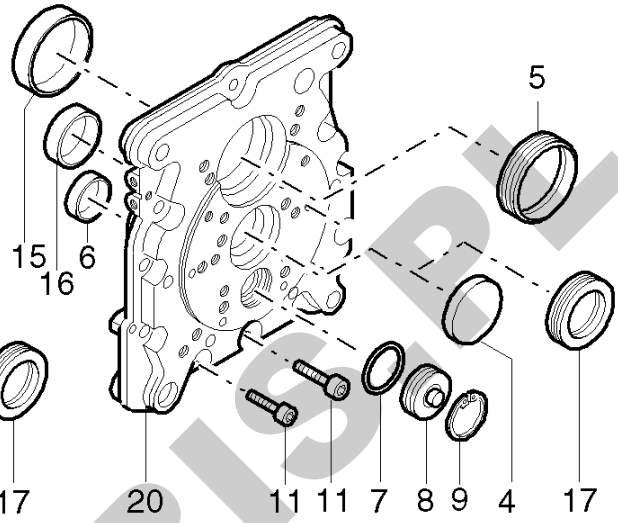


19 (4-6,15-17,20)

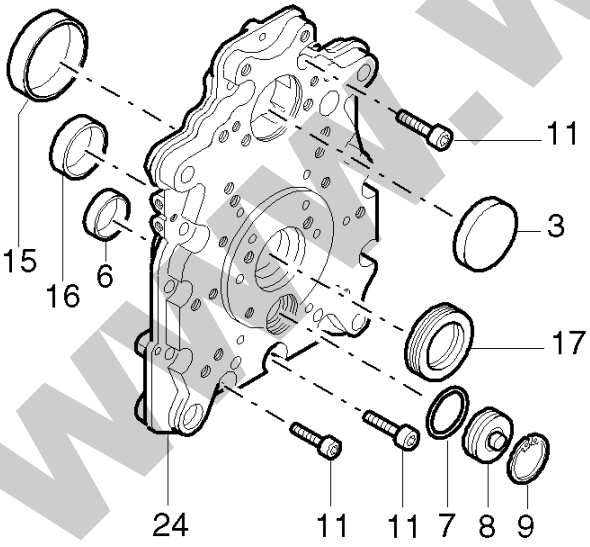


22 (3,6,15-17,24)

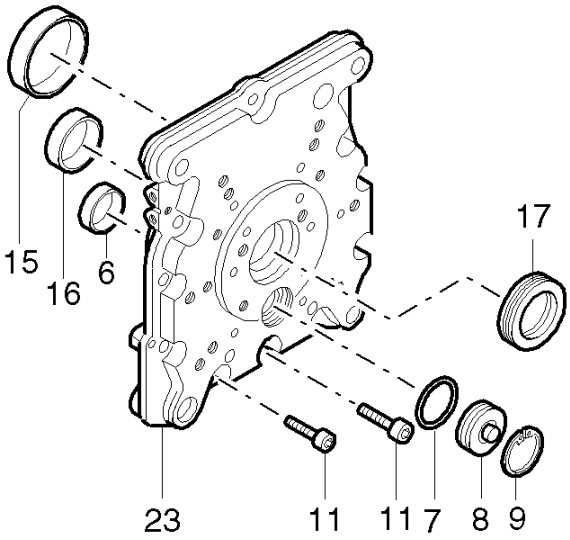


21 (6,15-17,23)

WWW.WOBIS.PL

| Pos. | Part no. | Description | Qty. | Notice | Add. notice | kg | EA | TA | DA | dDPW | List price |
|---|---|---|---|---|---|---|---|---|---|---|---|
| 2 | _nopart | Not in this engine | - | | | | | | | | |
| 3 | _nopart | Not in this engine | - | | | | | | | | |
| 4 | 50325700 | COVER 52 | 1 | 52 | | 0,021 | 4 | 11 | 1 | | |
| 5 | 50325810 | OIL SEAL 54X 70X 8 | 1 | 54 x 70 x 8<br>part was replaced by 50325811 | | 0,000 | 0 | 11 | 7 | | |
| 6 | 03797600 | BEARING BUSH | 1 | | | 0,009 | 9 | 11 | 0 | | |
| 7 | 50330400 | O-RING 27X2N | 1 | 27 x 2 | | 0,001 | 4 | 11 | 1 | | |
| 8 | 04000400 | COVER | 1 | | | 0,005 | 1 | 11 | 1 | | |
| 9 | 50399000 | CIRCLIP 32 X 1,2 | 1 | JL 32 x 1,2 DIN 472 | | 0,003 | 4 | 11 | 1 | | |
| 11 | 50417400 | ALL.SCREW M 8X30 Z3 | 12 | M 8 x 30 DIN 912-8.8 A3C/6900 | | 0,017 | 4 | 11 | 1 | | |
| 14 | _noorder | No single order | - | | | | | | | | |
| 15 | 04000310 | BEARING BUSH | 1 | | | 0,036 | 1 | 11 | 1 | | |
| 16 | 04023210 | BEARING BUSH | 1 | | | 0,020 | 1 | 11 | 1 | | |
| 17 | 50364700 | OIL SEAL 32X 52X 7 | 1 | 32 x 52 x 7<br>part was replaced by 50364701 | | 0,000 | 0 | 11 | 7 | | |
| 19 | 01293410 | TIMING COVER SAE | 1 | SAE | | 2,210 | 1 | 12 | 0 | | |
| 20 | _noorder | No single order | - | | | | | | | | |
| 21 | 01280910 | TIMING COVER NO.3 | 1 | | | 2,200 | 1 | 12 | 0 | | |
| 22 | _nopart | Not in this engine | - | | | | | | | | |
| 23 | _noorder | No single order | - | | | | | | | | |
| 24 | _noorder | No single order | - | | | | | | | | |

WWW.WOBIS.PL

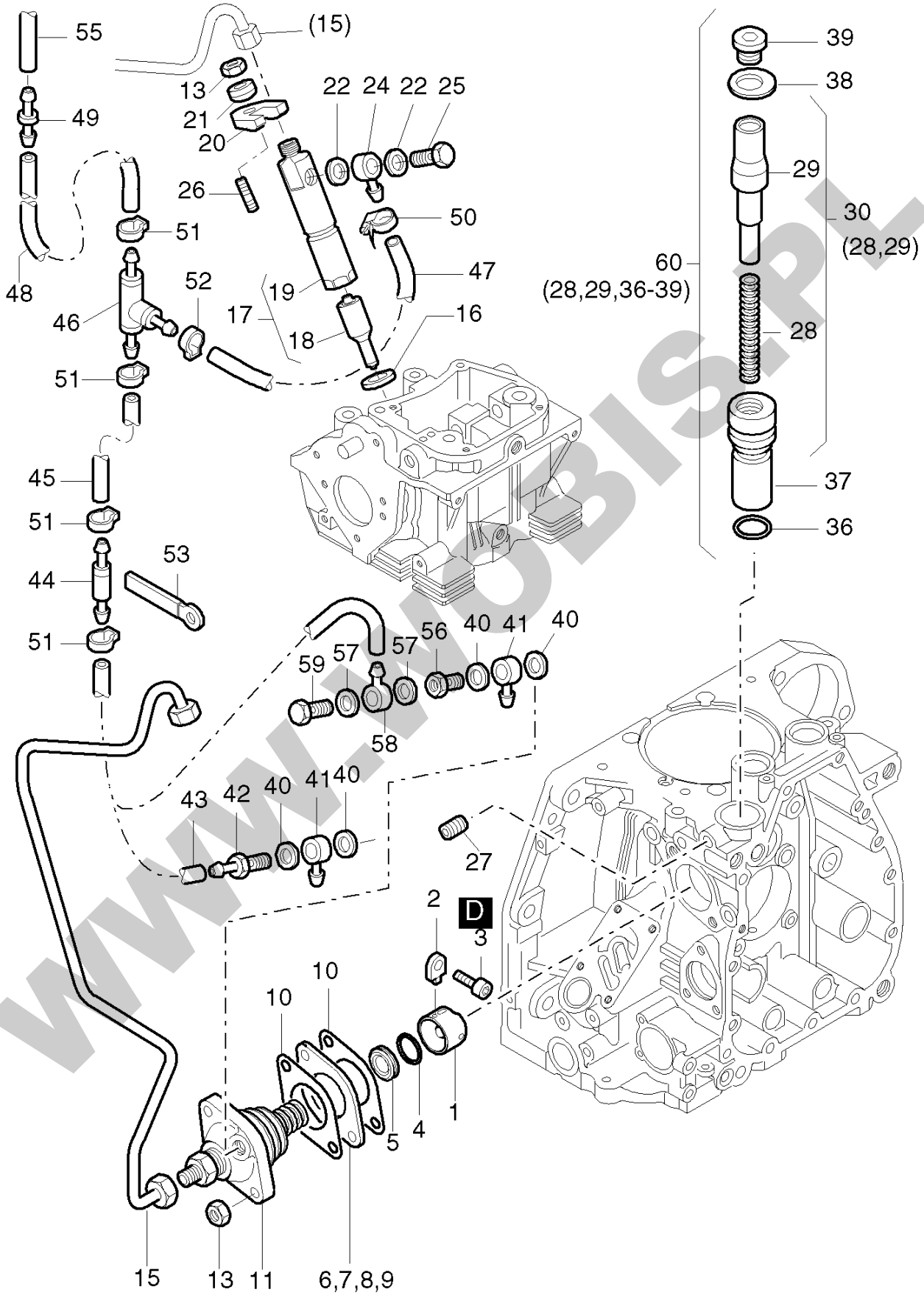
55
(15)
13
21
20
22 24 22 25
49
26
50
51
47
48
52
19
17
46
18
16
51
45
51
53
44
51
59
57
57
56
40 41 40
58
43 42 40 41 40
27
2
D
3
10
10
5
4
1
15
13
11
6,7,8,9
39
38
29
30
(28,29)
60
(28,29,36-39)
28
37
36

WWW.WOBIS.PL

| Pos. | Part no. | Description | Qty. | Notice | Add. notice | kg | EA | TA | DA | dDPW | List price |
|---|---|---|---|---|---|---|---|---|---|---|---|
| 1 | 50331501 | ROLLER TAPPET CPL. | 1 | | | 0,038 | 4 | 11 | 5 | | |
| 2 | 04000901 | GUIDE | 1 | | | 0,004 | 1 | 11 | 0 | | |
| 3 | 50050600 | ALL.SCR.M 6X 12 | 1 | M 6 x 12 DIN 912-8.8 | | 0,005 | 4 | 11 | 1 | | |
| 4 | 50390200 | O-RING 17 X 1,1 | 0... 1 | 17 x 1,1 | | 0,001 | 4 | 11 | 1 | | |
| 4 | 50363400 | O-RING 17X 1,2 | 0... 1 | 17 x 1,2 | | 0,001 | 4 | 11 | 1 | | |
| 5 | 04011700 | PLATE | 1 | | | 0,007 | 1 | 11 | 5 | | |
| 6 | 03209700 | SHIM 0,3 | 0... 1 | 0,30 mm | | 0,003 | 1 | 11 | 1 | | |
| 7 | 04102400 | SHIM 0,60/42,2 | 0... 1 | 0,60 mm | | 0,001 | 1 | 11 | 1 | | |
| 8 | 04102500 | SHIM 0,90/42,2 | 0... 1 | 0,90 mm | | 0,009 | 1 | 11 | 1 | | |
| 9 | 04102600 | SHIM 1,20/42,2 | 0... 1 | 1,20 mm | | 0,013 | 1 | 11 | 1 | | |
| 10 | 04071300 | GASKET | 0... 2 | 0,10 mm | | 0,001 | 1 | 11 | 1 | | |
| 10 | 04102200 | GASKT.INJC.PUMP 0,2 | 0... 2 | 0,20 mm | | 0,001 | 1 | 11 | 1 | | |
| 10 | 04102300 | GASKT.INJC.PUMP 0,3 | 0... 2 | 0,30 mm | | 0,001 | 1 | 11 | 1 | | |
| 11 | 05129300 | INJECT.PUMP 1Q65/52 | 1 | | | 0,500 | 4 | 11 | 0 | | |
| 13 | 50148000 | HEXAGON NUT M 8 | 3 | M 8 DIN 934-8 A3C | | 0,005 | 4 | 11 | 1 | | |
| 15 | 01268201 | FUEL PRESS.PIPE | 1 | | | 0,135 | 9 | 11 | 0 | | |
| 16 | 04025800 | JOINT WASHER | 1 | 2,0 MM | | 0,002 | 1 | 11 | 1 | | |
| 17 | 50365200 | INJECTOR | 1 | | | 0,190 | 4 | 11 | 0 | | |
| 18 | 50383200 | NOZZLE DLLA 170P260 | 1 | | | 0,050 | 4 | 13 | 0 | | |
| 19 | _noorder | No single order | - | | | | | | | | |
| 20 | 03792400 | FLANGE | 1 | part was replaced by 03792401 | | 0,000 | 0 | 11 | 0 | | |
| 21 | 04035700 | WASHER | 1 | | | 0,007 | 1 | 11 | 1 | | |
| 22 | 50000800 | JOINT A 6,5X 9,5 | 2 | A 6,5 x 9,5 DIN 7603-Cu | | 0,001 | 4 | 11 | 1 | | |
| 24 | 50333400 | BANJO CONNECTION | 1 | | | 0,005 | 4 | 11 | 1 | | |
| 25 | 50313000 | BANJO BOLT M 6 | 1 | M 6 | | 0,005 | 4 | 11 | 1 | | |
| 26 | 50279200 | STUD M 8X 40 | 1 | M 8 x 40 DIN 835-8.8 A3C | | 0,019 | 4 | 11 | 1 | | |
| 27 | 50004600 | GRUB SCREW M 8X16 | 1 | M 8 x 16 DIN 916-45H A3C | | 0,003 | 4 | 11 | 1 | | |
| 28 | 05035200 | PRESSURE SPRING | 1 | | | 0,005 | 1 | 11 | 1 | | |
| 29 | _noorder | No single order | - | | | | | | | | |
| 30 | 01519500 | PIST.+SPRG.EXT.FUEL | 1 | | | 0,055 | 1 | 12 | 1 | | |

WWW.WOBIS.PL

| Pos. | Part no. | Description | Qty. | Notice | Add. notice | kg | EA | TA | DA | dDPW | List price |
|---|---|---|---|---|---|---|---|---|---|---|---|
| 36 | 50328900 | O-RING 22X1,6 | 1 | 22 x 1,6 | | 0,001 | 4 | 11 | 1 | | |
| 37 | 04001410 | CYL.F.EXTR.FUEL DEV | 1 | | | 0,245 | 1 | 11 | 1 | | |
| 38 | 04001600 | DISC | 1 | | | 0,009 | 1 | 11 | 1 | | |
| 39 | 50330800 | CLOS.SCREW M16X1,5 | 1 | M 16 x 1,5 DIN 908-5.8 A3C Tuf. | | 0,019 | 4 | 11 | 1 | | |
| 40 | 50001100 | JOINT A12 X15,5 | 2 | A 12 x 15,5 DIN 7603-Cu | | 0,001 | 4 | 11 | 1 | | |
| 41 | 50015800 | RING PIECE NW6 | 1 | NW 6 | | 0,015 | 4 | 11 | 1 | | |
| 42 | 03662300 | HOSE NIPPLE | 1 | | | 0,034 | 1 | 11 | 5 | | |
| 43 | 04060400 | FUEL HOSE 5,0 X 100 | 1 | 5 x 2,5 - 100 mm | | 0,008 | 9 | 11 | 0 | | |
| 43 | 03664200 | FUEL HOSE 5,0 X 130 | 1 | 5 x 2,5 - 130 mm | | 0,007 | 0 | 11 | 7 | | |
| 44 | 00805500 | VENT VALVE | 1 | part was replaced by 00805501 | | 0,004 | 0 | 11 | 7 | | |
| 45 | 03807100 | FUEL HOSE 5,0X 150 | 1 | 5 x 150 mm | | 0,010 | 9 | 11 | 0 | | |
| 46 | 03989600 | HOSE NIPPLE T | 1 | part was replaced by 03989601 | | 0,000 | 0 | 11 | 7 | | |
| 46 | 50157800 | HOSE NIPPLE T NW 3 | 1 | NW 3<br>part was replaced by 05242400 | | 0,009 | 0 | 11 | 7 | | |
| 47 | 03962100 | FUEL HOSE 3,5X 160 | 1 | 3,5 x 2,5 - 160 mm | | 0,007 | 0 | 11 | 7 | | |
| 47 | 03899200 | FUEL PIPE 3,5X 270 | 1 | 3,5 x 270 mm | | 0,011 | 1 | 11 | 4 | | |
| 48 | 04089700 | FUEL HOSE 5,0 X 530 | 1 | 5 x 2,5 - 530 mm | | 0,000 | 0 | 11 | 7 | | |
| 49 | 50279600 | CONNECTING NIPPLE | 1 | | | 0,006 | 4 | 11 | 1 | | |
| 50 | 50357200 | HOSE CLIP 7-11 | 1 | 7 - 11 SX5 SW4 | | 0,003 | 4 | 11 | 1 | | |
| 51 | 50399801 | CLAMP 11,3 | 4 | 11,3 | | 0,002 | 4 | 11 | 1 | | |
| 52 | 50399900 | CLAMP 9,5 | 1 | 9,5<br>part was replaced by 50399901 | | 0,001 | 0 | 11 | 7 | | |
| 53 | 05001200 | CLIP | 1 | | | 0,005 | 1 | 21 | 1 | | |
| 55 | _noorder | No single order | - | | | | | | | | |
| 56 | 03407700 | BANJO BOLT | 1 | | | 0,018 | 1 | 11 | 5 | | |
| 57 | 50000900 | JOINT A8X11,5 | 2 | A 8 x 11,5 DIN 7603-Cu | | 0,001 | 4 | 11 | 1 | | |
| 58 | 50015700 | RING PIECE NW3 | 1 | NW 3 | | 0,007 | 4 | 11 | 1 | | |
| 59 | 50006100 | BANJO BOLT 4-5-3 | 1 | 4-5-3 DIN 7643 | | 0,007 | 4 | 11 | 1 | | |
| 60 | 01498902 | PIST.+CYL.EXTR.FUEL | 1 | | | 0,328 | 1 | 11 | 1 | | |
| D | 50223300 | LOCTITE 221 | 1 | 50 ML | | 0,077 | 4 | 12 | 0 | | |
| | | | | | | | | | | | |

WWW.WOBIS.PL

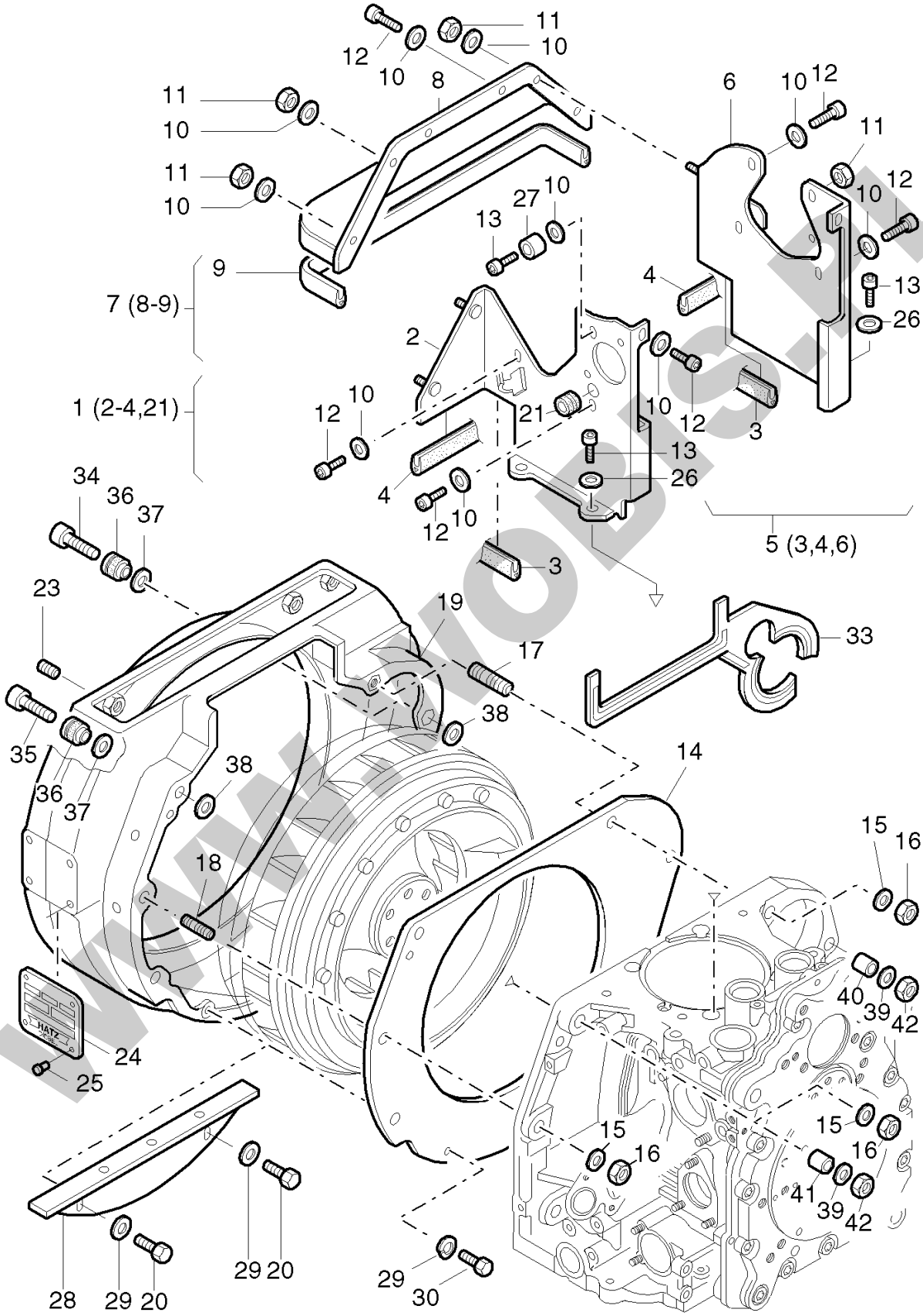
11
10
12
10
8
11
10
11
10
9
7 (8-9)
1 (2-4,21)
6
10
12
11
10
12
27
10
13
4
13
26
2
10
12
3
21
13
26
4
12
10
3
5 (3,4,6)
34
36
37
23
19
17
33
38
35
36
37
38
14
18
15
16
40
39
42
24
25
15
16
15
16
41
39
42
28
29
20
29
20
29
30

WWW.WOBIS.PL

| Pos. | Part no. | Description | Qty. | Notice | Add. notice | kg | EA | TA | DA | dDPW | List price |
|---|---|---|---|---|---|---|---|---|---|---|---|
| 1 | 01260911 | COOLING AIR DUCT | 1 | part was replaced by 01260920 | | 0,270 | 9 | 11 | 0 | | |
| 2 | _noorder | No single order | - | | | | | | | | |
| 3 | 04030901 | SEALING STRIP 29MM | 2 | 29 mm | | 0,002 | 1 | 11 | 1 | | |
| 4 | 04030801 | SEALING STRIP 41MM | 2 | 41 mm | | 0,003 | 1 | 11 | 1 | | |
| 5 | 01261001 | COOLING AIR DUCT | 1 | part was replaced by 01261010 | | 0,299 | 0 | 11 | 7 | | |
| 6 | _noorder | No single order | - | | | | | | | | |
| 7 | 01261101 | COOLING AIR DUCT | 1 | | | 0,269 | 1 | 11 | 1 | | |
| 8 | _noorder | No single order | - | | | | | | | | |
| 9 | 04146500 | SEALING STRIP 304MM | 1 | 304 mm | | 0,028 | 1 | 11 | 1 | | |
| 10 | 50081200 | SPRING WASHER A 6 | 13 | A 6 DIN 137 - A3C | | 0,001 | 4 | 11 | 1 | | |
| 11 | 50144400 | HEXAGON NUT M 6 | 5 | M 6 DIN 934 - 8 A3C | | 0,002 | 4 | 11 | 1 | | |
| 12 | 50149100 | ALLEN SCREW M 6X 12 | 10 | M 6 x 12 DIN 912-8.8 A3C | | 0,005 | 4 | 11 | 1 | | |
| 13 | 50170700 | ALL.SCR.M 6 X 16 | 5 | M 6 x 16 DIN 912-8.8 A3C | | 0,006 | 4 | 11 | 1 | | |
| 14 | _nopart | Not in this engine | - | | | | | | | | |
| 15 | _nopart | Not in this engine | - | | | | | | | | |
| 16 | _nopart | Not in this engine | - | | | | | | | | |
| 17 | _nopart | Not in this engine | - | | | | | | | | |
| 18 | _nopart | Not in this engine | - | | | | | | | | |
| 19 | 01282101 | BLOWER DUCT.HD-STRT | 1 | Handstart, demarr. man.<br>BLECHGEH.H-STAR | | 1,975 | 1 | 21 | 5 | | |
| 19 | 01282310 | BLOW.DUCT.EL.START | 1 | E-Start, el. starter, BLECHGEHAEUSE | | 1,911 | 1 | 21 | 0 | | |
| 20 | _nopart | Not in this engine | - | | | | | | | | |
| 21 | 50334800 | RUBBER SLEEVE | 1 | | | 0,001 | 4 | 11 | 1 | | |
| 23 | 50226000 | GRUB SCREW M 8X6 | 4 | M 8 x 6 DIN 913-45H TU.FLEC | | 0,002 | 4 | 11 | 1 | | |
| 24 | _noorder | No single order | - | | | | | | | | |
| 25 | 40002500 | RIVET 2,4X6 | 4 | 2,4 | | 0,001 | 4 | 11 | 1 | | |
| 26 | 50144500 | FLAT WASHER 6,4 | 4 | 6,4 DIN 125-St A3C | | 0,001 | 4 | 11 | 1 | | |
| 27 | 03936400 | BUSH 6,2X8X5,5 | 1 | 6,2 x 8 x 5,5 | | 0,001 | 1 | 11 | 1 | | |
| 28 | _nopart | Not in this engine | - | | | | | | | | |
| 29 | _nopart | Not in this engine | - | | | | | | | | |

WWW.WOBIS.PL

| Pos. | Part no. | Description | Qty. | Notice | Add. notice | kg | EA | TA | DA | dDPW | List price |
|---|---|---|---|---|---|---|---|---|---|---|---|
| 30 | _nopart | Not in this engine | - | | | | | | | | |
| 33 | 04058600 | GASKET F.AIR GUIDE | 1 | | | 0,013 | 1 | 11 | 5 | | |
| 34 | 50288800 | ALL.SCR.M 8X 55 | 3 | M 8 x 55 DIN 912-8.8 A3C | | 0,027 | 4 | 11 | 1 | | |
| 35 | 50392900 | ALL.SCR.M 8 X 50 | 2 | M 8 x 50 DIN 912 - 8.8 A3C | | 0,025 | 4 | 11 | 1 | | |
| 36 | 01332900 | SPACER BUSH | 5 | | | 0,020 | 1 | 11 | 0 | | |
| 37 | 04064700 | RUBBER SEAL RING | 5 | | | 0,001 | 1 | 11 | 5 | | |
| 38 | 04054300 | WASHER 8,4X21 X3 | 5 | 8,4 x 21 x 3 | | 0,006 | 1 | 11 | 1 | | |
| 39 | 04065100 | DISC 9,1X20X2,1 | 8 | 9,1 x 20 x 2,1 | | 0,003 | 1 | 11 | 1 | | |
| 40 | 04056500 | BUSH 8,4X12,8H11 | 2 | 8,4 x 12,8 | | 0,012 | 1 | 11 | 0 | | |
| 41 | 04054410 | BUSH F. CRANKCASE | 3 | 8,4 x 10,8 | | 0,007 | 9 | 11 | 5 | | |
| 42 | 50148000 | HEXAGON NUT M 8 | 5 | M 8 DIN 934-8 A3C | | 0,005 | 4 | 11 | 1 | | |

WWW.WOBIS.PL

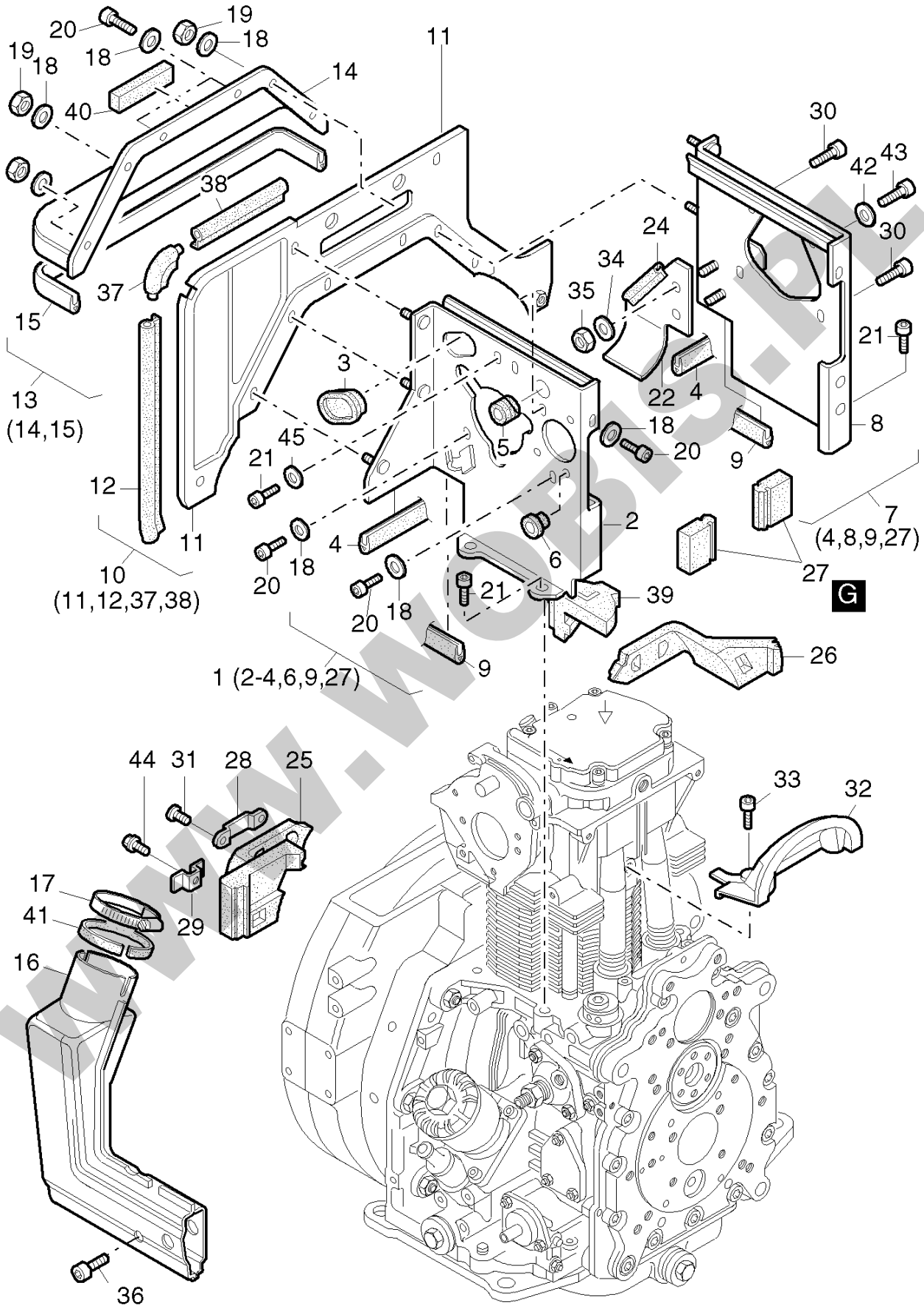
20
19
18
19
18
18
40
14
11
38
37
15
13
(14,15)
12
11
10
(11,12,37,38)
3
45
21
18
20
4
18
20
21
18
20
1 (2-4,6,9,27)
9
5
6
2
39
G
30
42
43
30
24
34
35
21
22
4
18
20
9
8
7
(4,8,9,27)
27
26
44
31
28
25
17
41
29
16
36
33
32

www.WOBIS.PL

| Pos. | Part no. | Description | Qty. | Notice | Add. notice | kg | EA | TA | DA | dDPW | List price |
|---|---|---|---|---|---|---|---|---|---|---|---|
| 1 | 01290800 | COOLING AIR DUCT. | 1 | part was replaced by 01290810 | | 0,366 | 9 | 11 | 0 | | |
| 2 | _noorder | No single order | - | | | | | | | | |
| 3 | 04078600 | RUBBER SLEEVE | 1 | | | 0,003 | 1 | 11 | 1 | | |
| 4 | 04030801 | SEALING STRIP 41MM | 2 | 41 mm | | 0,003 | 1 | 11 | 1 | | |
| 5 | _nopart | Not in this engine | - | | | | | | | | |
| 6 | 50334800 | RUBBER SLEEVE | 1 | | | 0,001 | 4 | 11 | 1 | | |
| 7 | 01290700 | COOLING AIR DUCT. | 1 | part was replaced by 01290710 | | 0,399 | 9 | 11 | 0 | | |
| 8 | _noorder | No single order | - | | | | | | | | |
| 9 | 04030901 | SEALING STRIP 29MM | 2 | 29 mm | | 0,002 | 1 | 11 | 1 | | |
| 10 | 01290600 | INTERMEDIATE WALL | 1 | | | 0,372 | 1 | 11 | 1 | | |
| 11 | _noorder | No single order | - | | | | | | | | |
| 12 | 04066900 | SEALG.STRIP 230MM | 1 | 228 mm | | 0,018 | 1 | 11 | 1 | | |
| 13 | 01290400 | COOLING AIR DUCT | 1 | part was replaced by 01290401 | | 0,231 | 0 | 11 | 7 | | |
| 14 | _noorder | No single order | - | | | | | | | | |
| 15 | 04031001 | SEALING STRIP 308MM | 1 | 308 mm | | 0,020 | 1 | 11 | 1 | | |
| 16 | 01307600 | AIR INTAKE ELBOW | 1 | | | 0,312 | 1 | 11 | 1 | | |
| 17 | 40071500 | HOSE CLIP 32-50 | 1 | 32 - 50 | | 0,025 | 4 | 11 | 1 | | |
| 18 | 50144500 | FLAT WASHER 6,4 | 13 | 6,4 DIN 125-St A3C | | 0,001 | 4 | 11 | 1 | | |
| 19 | 50144400 | HEXAGON NUT M 6 | 4 | M 6 DIN 934 - 8 A3C | | 0,002 | 4 | 11 | 1 | | |
| 20 | 50384200 | ALL.SCR.M 6X 12 | 7 | M 6x12 DIN 912-8.8 A3C Tuf. 360 G | | 0,005 | 4 | 11 | 1 | | |
| 21 | _nopart | Not in this engine | - | | | | | | | | |
| 22 | 01309800 | COOLING AIR DUCT. | 1 | | | 0,070 | 1 | 11 | 1 | | |
| 24 | 04085500 | SEALING STRIP 60 MM | 1 | 60 mm | | 0,010 | 1 | 11 | 1 | | |
| 25 | 04075500 | FILLING PIECE | 1 | | | 0,098 | 1 | 11 | 1 | | |
| 26 | 04075400 | FILLING PIECE | 1 | | | 0,081 | 1 | 11 | 1 | | |
| 27 | _nopart | Not in this engine | - | | | | | | | | |
| 28 | _nopart | Not in this engine | - | | | | | | | | |
| 29 | 04075600 | SUPPORT | 4 | | | 0,003 | 1 | 11 | 1 | | |
| 30 | _nopart | Not in this engine | - | | | | | | | | |
| 31 | _nopart | Not in this engine | - | | | | | | | | |

WWW.WOBIS.PL

| Pos. | Part no. | Description | Qty. | Notice | Add. notice | kg | EA | TA | DA | dDPW | List price |
|---|---|---|---|---|---|---|---|---|---|---|---|
| 32 | _nopart | Not in this engine | - | | | | | | | | |
| 33 | _nopart | Not in this engine | - | | | | | | | | |
| 34 | 50120000 | DISC A 6,4 | 2 | A 6,4 DIN 9021-St A3C | | 0,003 | 4 | 11 | 1 | | |
| 35 | 50328300 | HEXAGON NUT VM6 | 2 | VM 6 DIN 980-8 A3C | | 0,002 | 4 | 11 | 1 | | |
| 36 | 50170600 | ALL.SCR.M 6X 20 | 1 | M 6 x 20 DIN 912-8.8 A3C | | 0,007 | 4 | 11 | 1 | | |
| 37 | 04066400 | GASK.F.INTERME.WALL | 1 | | | 0,003 | 1 | 11 | 1 | | |
| 38 | 04074900 | SEALG.STRIP 100MM | 1 | 100 mm | | 0,010 | 1 | 11 | 1 | | |
| 39 | 04079600 | FILLING PIECE | 1 | | | 0,034 | 1 | 11 | 1 | | |
| 40 | 04087700 | SEALG.STRIP 12X6X59 | 1 | 12 x 6 x 58 | | 0,005 | 9 | 11 | 0 | | |
| 41 | 04089100 | SEALG.STRIP13X1X148 | 1 | 13 x 1 x 148 | | 0,001 | 1 | 11 | 1 | | |
| 42 | 50170900 | SPRING WASHER 6 | 1 | 6 DIN 128 - A3C | | 0,001 | 4 | 11 | 1 | | |
| 43 | 50384200 | ALL.SCR.M 6X 12 | 1 | M 6x12 DIN 912-8.8 A3C Tuf. 360 G | | 0,005 | 4 | 11 | 1 | | |
| 44 | 50289200 | HEXSCREW M 6X 12 | 4 | M 6 x 12 KZ 1-8.8 A3D | | 0,005 | 4 | 11 | 1 | | |
| 45 | _nopart | Not in this engine | - | | | | | | | | |
| G | 50256501 | LOCTITE IS 407 | 1 | 20 ML | | 0,033 | 4 | 12 | 0 | | |

WWW.WOBIS.PL

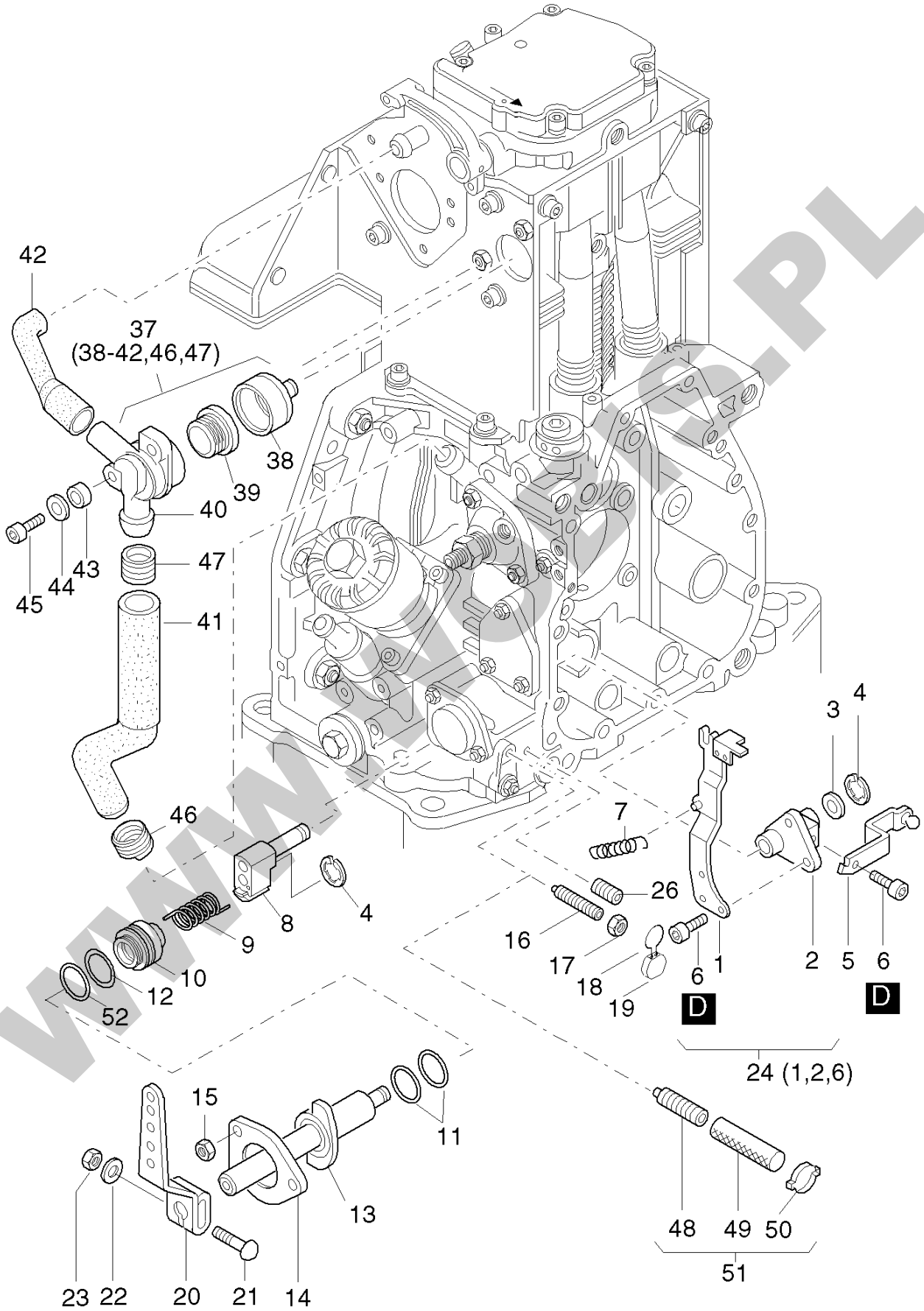
42
37
(38-42,46,47)
38
39
40
47
43
44
45
41
46
8
4
9
10
12
52
7
26
16
17
18
19
6
1
3
4
2
5
6
D
D
24 (1,2,6)
15
11
13
23
22
20
21
14
48
49
50
51

WWW.WOBIS.PL

| Pos. | Part no. | Description | Qty. | Notice | Add. notice | kg | EA | TA | DA | dDPW | List price |
|---|---|---|---|---|---|---|---|---|---|---|---|
| 1 | _noorder | No single order | - | | | | | | | | |
| 2 | _noorder | No single order | - | | | | | | | | |
| 3 | 04000100 | SHIM | 1 | | | 0,001 | 1 | 11 | 1 | | |
| 4 | 50266100 | CIRCLIP 6 | 2 | 6 DIN 6799 | | 0,001 | 4 | 11 | 1 | | |
| 5 | 04037500 | LEVER | 1 | | | 0,025 | 1 | 11 | 1 | | |
| 6 | 50328701 | ALL.SCR. M5X8 | 4 | M 5 x 8 DIN 912-8.8 Tuf. | | 0,003 | 4 | 11 | 1 | | |
| 7 | 04000200 | TENSION SPRING | 1 | | | 0,001 | 1 | 11 | 1 | | |
| 8 | 01242810 | GUIDE | 1 | part was replaced by 01242811 | | 0,063 | 0 | 11 | 0 | | |
| 9 | 03799010 | THIGH SPRING | 1 | | | 0,012 | 1 | 11 | 1 | | |
| 10 | 04052710 | SPACER RING | 1 | | | 0,155 | 1 | 11 | 1 | | |
| 11 | 50412900 | O-RING 18 X 2 | 2 | 18 x 2 | | 0,001 | 4 | 11 | 1 | | |
| 12 | 50129900 | O-RING 32X37X2,5 | 1 | 32 x 2,5 | | 0,001 | 4 | 11 | 1 | | |
| 13 | 01279221 | STOP RNG.SPD.CONT.S | 1 | | | 0,215 | 1 | 11 | 1 | | |
| 13 | 01302921 | STOP RNG.SPD.CONT.C | 1 | | | 0,230 | 1 | 11 | 1 | | |
| 14 | 03799210 | FRICTION PLATE | 1 | | | 0,017 | 1 | 11 | 1 | | |
| 15 | 50328300 | HEXAGON NUT VM6 | 3 | VM 6 DIN 980-8 A3C | | 0,002 | 4 | 11 | 1 | | |
| 16 | 03799400 | GRUB SCREW | 2 | M 6 x 45<br>part was replaced by 50507800 | | 0,005 | 0 | 11 | 7 | | |
| 17 | 50144400 | HEXAGON NUT M 6 | 2 | M 6 DIN 934 - 8 A3C | | 0,002 | 4 | 11 | 1 | | |
| 18 | 40021500 | SEAL WIRE 0,5-0,3 | 2 | 0,5 / 0,3 x 200 | | 0,001 | 4 | 11 | 1 | | |
| 19 | 40021400 | LEAD SEAL 8 MM | 2 | 8 mm ø | | 0,001 | 4 | 11 | 1 | | |
| 20 | 03888300 | HANDLEVER | 1 | | | 0,100 | 1 | 11 | 1 | | |
| 21 | 03927300 | SCREW M 6X 32 | 1 | M 6 x 32<br>part was replaced by 03927301 | | 0,000 | 0 | 11 | 0 | | |
| 22 | 50144500 | FLAT WASHER 6,4 | 1 | 6,4 DIN 125-St A3C | | 0,001 | 4 | 11 | 1 | | |
| 23 | 50144400 | HEXAGON NUT M 6 | 1 | M 6 DIN 934 - 8 A3C | | 0,002 | 4 | 11 | 1 | | |
| 24 | 01246803 | GOVERNOR LEVER | 1 | | | 0,110 | 1 | 11 | 1 | | |
| 26 | 50403500 | GRUB SCREW M8X20 | 1 | M 8 x 20 DIN 914-45H | | 0,006 | 4 | 11 | 1 | | |
| 37 | 01308101 | BREATHER VALVE | 1 | | | 0,078 | 1 | 11 | 1 | | |
| 38 | 04080300 | BREATHER CUP | 1 | | | 0,004 | 1 | 11 | 1 | | |
| 39 | 03568700 | DIAPHRAGM | 1 | part was replaced by 03568701 | | 0,004 | 0 | 11 | 7 | | |

WWW.WOBIS.PL

| Pos. | Part no. | Description | Qty. | Notice | Add. notice | kg | EA | TA | DA | dDPW | List price |
|---|---|---|---|---|---|---|---|---|---|---|---|
| 40 | _noorder | No single order | - | | | | | | | | |
| 41 | 04083800 | BREATHER HOSE | 1 | FORM 1894 | | 0,040 | 1 | 11 | 1 | | |
| 42 | 04074800 | BREATHER HOSE | 1 | FORM 1695 | | 0,012 | 1 | 11 | 1 | | |
| 43 | 04080500 | BUSH | 2 | 7 x 8 x 8 | | 0,001 | 1 | 11 | 1 | | |
| 44 | 50081200 | SPRING WASHER A 6 | 2 | A 6 DIN 137 - A3C | | 0,001 | 4 | 11 | 1 | | |
| 45 | 50170700 | ALL.SCR.M 6 X 16 | 2 | M 6 x 16 DIN 912-8.8 A3C | | 0,006 | 4 | 11 | 1 | | |
| 46 | 04090500 | CLAMP 18MM | 1 | | | 0,001 | 1 | 11 | 1 | | |
| 47 | 04122300 | CLAMP | 1 | | | 0,001 | 1 | 11 | 1 | | |
| 48 | 50405301 | GRUB SCREW M6 X 45 | 1 | M 6 x 45 DIN 915 Tuf. | | 0,005 | 4 | 11 | 1 | | |
| 49 | 05037900 | HOSE 7 X 12 X 90 | 1 | 7 x 12 x 90 | | 0,007 | 9 | 21 | 0 | | |
| 50 | 50388300 | CLAMP 11-13 | 1 | 11 - 13 | | 0,003 | 4 | 21 | 1 | | |
| 51 | 01474000 | ADJUST.SCREW1D20-40 | 1 | | | 0,015 | 1 | 22 | 1 | | |
| 52 | 50453600 | SUPPORTING DISC SS | 1 | 32 x 45 x 2,5 A3C DIN 988 | | 0,015 | 4 | 11 | 1 | | |
| D | 50223300 | LOCTITE 221 | 1 | 50 ML | | 0,077 | 4 | 12 | 0 | | |

WWW.WOBIS.PL

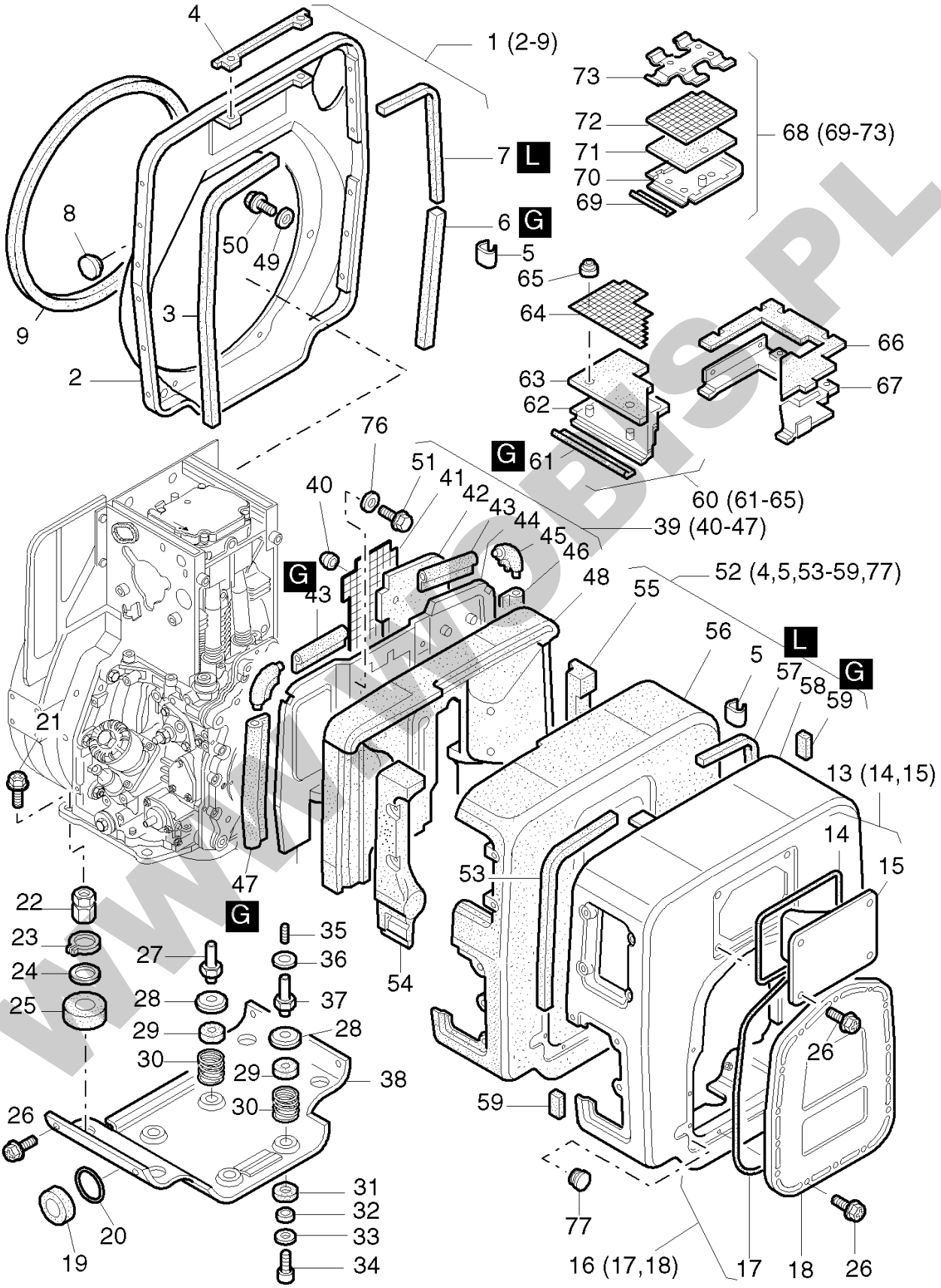
4
1 (2-9)
73
72
71
70
69
68 (69-73)
7 L
6 G
5
8
50
49
3
9
2
65
64
66
63
62
67
G 61
60 (61-65)
76
51
41
42
43
44
45
46
40
39 (40-47)
G
43
48
55
52 (4,5,53-59,77)
56
L
5
57
58
G
59
21
13 (14,15)
14
15
53
47
G
22
23
24
25
27
35
36
37
28
29
30
38
54
26
59
31
32
33
34
20
19
77
16 (17,18)
17
18
26

WWW.WOBIS.PL

| Pos. | Part no. | Description | Qty. | Notice | Add. notice | kg | EA | TA | DA | dDPW | List price |
|---|---|---|---|---|---|---|---|---|---|---|---|
| 1 | 01289100 | END PLATE | 1 | | | 2,294 | 1 | 11 | 1 | | |
| 2 | _noorder | No single order | - | | | | | | | | |
| 3 | 04080600 | SEALG.STRIP 8X8X530 | 1 | 8 x 8 x 530 mm Silikon | | 0,021 | 1 | 11 | 1 | | |
| 4 | 04073800 | GASKET | 2 | | | 0,006 | 1 | 11 | 1 | | |
| 5 | 04084100 | CATCH | 8 | | | 0,003 | 1 | 11 | 1 | | |
| 6 | _nopart | Not in this engine | - | | | | | | | | |
| 7 | 04081000 | SEALG.STRIP 8X8X530 | 1 | 8 x 8 x 530 mm | | 0,021 | 1 | 11 | 1 | | |
| 8 | 50395500 | COVER 17,6 | 1 | PHT 17, 6/20 | | 0,001 | 4 | 11 | 1 | | |
| 9 | 04049500 | SEALING STRIP | 1 | 1230 mm | | 0,130 | 1 | 11 | 1 | | |
| 13 | 01289500 | COVER SMALL | 1 | | | 0,163 | 1 | 11 | 1 | | |
| 14 | 04049100 | SEALING STRIP | 1 | | | 0,003 | 1 | 11 | 1 | | |
| 15 | _noorder | No single order | - | | | | | | | | |
| 16 | 01289401 | COVER BIG | 1 | | | 0,620 | 1 | 11 | 1 | | |
| 16 | 01474401 | COVER BIG | 1 | Handstart, demarr. man. | | 0,615 | 1 | 21 | 4 | | |
| 17 | 04080900 | SEALING STRIP | 1 | 3,0 x 1045 | | 0,006 | 1 | 11 | 1 | | |
| 18 | _noorder | No single order | - | | | | | | | | |
| 19 | 03755300 | GASKET | 1 | 46/16 | | 0,004 | 1 | 11 | 1 | | |
| 20 | 03592301 | WASHER 26,1X38X1 | 1 | 26,1 x 38 x 1 | | 0,005 | 1 | 11 | 1 | | |
| 21 | 50386600 | HEXSCREW M10X 20 | 4 | M 10 x 20 A3C W 158.12 - 10.9 | | 0,025 | 4 | 21 | 1 | | |
| 22 | 03993700 | NUT M10 X 27,5 | 4 | M 10 x 27,5 | | 0,075 | 1 | 21 | 2 | | |
| 23 | 50020400 | CIRCLIP 24X1,2 | 4 | A 24 x 1,2 DIN 471 | | 0,002 | 4 | 11 | 1 | | |
| 24 | 03592301 | WASHER 26,1X38X1 | 4 | 26,1 x 38 x 1 | | 0,005 | 1 | 11 | 1 | | |
| 25 | 03755300 | GASKET | 4 | 46/16 | | 0,004 | 1 | 11 | 1 | | |
| 26 | 50289200 | HEXSCREW M 6X 12 | 24 | M 6 x 12 KZ 1-8.8 A3D | | 0,005 | 4 | 11 | 1 | | |
| 27 | 04077400 | SPACER | 2 | | | 0,022 | 1 | 11 | 1 | | |
| 28 | 04042100 | CUP | 4 | | | 0,010 | 1 | 11 | 1 | | |
| 29 | 04041900 | SEALING RING | 4 | | | 0,002 | 1 | 11 | 1 | | |
| 30 | 04042200 | PRESSURE SPRING | 4 | | | 0,015 | 1 | 11 | 1 | | |
| 31 | 04041800 | RUBBER SEAL RING | 4 | | | 0,004 | 1 | 11 | 1 | | |
| 32 | 04041700 | BUSH 7X12X11 | 4 | 7 x 12 x 11 | | 0,003 | 1 | 11 | 1 | | |

WWW.WOBIS.PL

| Pos. | Part no. | Description | Qty. | Notice | Add. notice | kg | EA | TA | DA | dDPW | List price |
|---|---|---|---|---|---|---|---|---|---|---|---|
| 33 | 04042000 | WASHER 6,5X22,5X1 | 4 | 6,5 x 22,5 x 1 | | 0,003 | 1 | 11 | 1 | | |
| 34 | 50170600 | ALL.SCR.M 6X 20 | 4 | M 6 x 20 DIN 912-8.8 A3C | | 0,007 | 4 | 11 | 1 | | |
| 35 | 50139200 | STUD M 6X 16 | 4 | M 6 x 16 DIN 939-8.8 | | 0,002 | 4 | 11 | 0 | | |
| 36 | 50144500 | FLAT WASHER 6,4 | 4 | 6,4 DIN 125-St A3C | | 0,001 | 4 | 11 | 1 | | |
| 37 | 04077400 | SPACER | 2 | | | 0,022 | 1 | 11 | 1 | | |
| 38 | 01303700 | BASE PAN | 1 | | | 1,323 | 1 | 11 | 1 | | |
| 39 | 01306300 | INTERMEDIATE WALL | 1 | | | 0,722 | 1 | 11 | 1 | | |
| 40 | 50388500 | HOLDING DISC 4,5 | 4 | 4,5 | | 0,002 | 4 | 11 | 1 | | |
| 41 | 04078100 | GRID | 1 | | | 0,057 | 0 | 11 | 1 | | |
| 42 | 04078000 | INSULATING BORD | 1 | | | 0,048 | 1 | 11 | 1 | | |
| 43 | 04074900 | SEALG.STRIP 100MM | 2 | 100 mm | | 0,010 | 1 | 11 | 1 | | |
| 44 | _noorder | No single order | - | | | | | | | | |
| 45 | 04066400 | GASK.F.INTERME.WALL | 2 | | | 0,003 | 1 | 11 | 1 | | |
| 46 | 04075000 | SEALG.STRIP 186MM | 1 | 180 mm | | 0,019 | 1 | 11 | 1 | | |
| 47 | 04066900 | SEALG.STRIP 230MM | 1 | 228 mm | | 0,018 | 1 | 11 | 1 | | |
| 48 | 01306500 | LINING | 1 | | | 0,302 | 1 | 11 | 1 | | |
| 49 | 50144500 | FLAT WASHER 6,4 | 6 | 6,4 DIN 125-St A3C | | 0,001 | 4 | 11 | 1 | | |
| 50 | 50274800 | HEXSCREW M 6X6 | 6 | M 6 x 6 DIN 933-8.8 A3C | | 0,003 | 4 | 11 | 1 | | |
| 51 | 50335600 | COMBI SCREW M 6X 16 | 2 | M 6 x 16 KZ 1-8.8 A3D | | 0,005 | 4 | 11 | 1 | | |
| 52 | 01289300 | BLOWER DUCTING | 1 | | | 4,856 | 1 | 11 | 1 | | |
| 53 | 04081600 | SEALG.STRIP 8X8X360 | 1 | 8 x 8 x 360 mm | | 0,014 | 1 | 11 | 1 | | |
| 54 | _nopart | Not in this engine | - | | | | | | | | |
| 55 | _nopart | Not in this engine | - | | | | | | | | |
| 56 | 01305300 | LINING | 1 | | | 1,135 | 1 | 11 | 1 | | |
| 57 | 04080700 | SEALG.STRIP 8X8X330 | 1 | 8 x 8 x 360 | | 0,014 | 1 | 11 | 1 | | |
| 58 | _noorder | No single order | - | | | | | | | | |
| 59 | 04081700 | SEALING STRIP8X8X25 | 2 | 8 x 8 x 25 mm | | 0,010 | 1 | 11 | 1 | | |
| 60 | _nopart | Not in this engine | - | | | | | | | | |
| 61 | _nopart | Not in this engine | - | | | | | | | | |
| 62 | _noorder | No single order | - | | | | | | | | |

WWW.WOBIS.PL

| Pos. | Part no. | Description | Qty. | Notice | Add. notice | kg | EA | TA | DA | dDPW | List price |
|---|---|---|---|---|---|---|---|---|---|---|---|
| 63 | _nopart | Not in this engine | - | | | | | | | | |
| 64 | _nopart | Not in this engine | - | | | | | | | | |
| 65 | _nopart | Not in this engine | - | | | | | | | | |
| 66 | _nopart | Not in this engine | - | | | | | | | | |
| 67 | _nopart | Not in this engine | - | | | | | | | | |
| 68 | 01289200 | PARITITION WALL "C" | 1 | | | 0,695 | 0 | 11 | 1 | | |
| 69 | _nopart | Not in this engine | - | | | | | | | | |
| 70 | _noorder | No single order | - | | | | | | | | |
| 71 | 04082800 | INSULATION PLATE | 1 | | | 0,025 | 1 | 11 | 1 | | |
| 72 | 04082700 | PERFORATED PLATE | 1 | | | 0,500 | 1 | 11 | 1 | | |
| 73 | _noorder | No single order | - | | | | | | | | |
| 76 | _noorder | No single order | - | | | | | | | | |
| 77 | 50160800 | CLOSING PLUG 10MM | 1 | F 5 14x10,7x7,5 SCHW. | | 0,001 | 4 | 11 | 1 | | |
| G | 50256501 | LOCTITE IS 407 | 1 | 20 ML | | 0,033 | 4 | 12 | 0 | | |
| L | 50256600 | SILICON SEALER | 1 | | | 0,130 | 4 | 12 | 0 | | |

WWW.WOBIS.PL

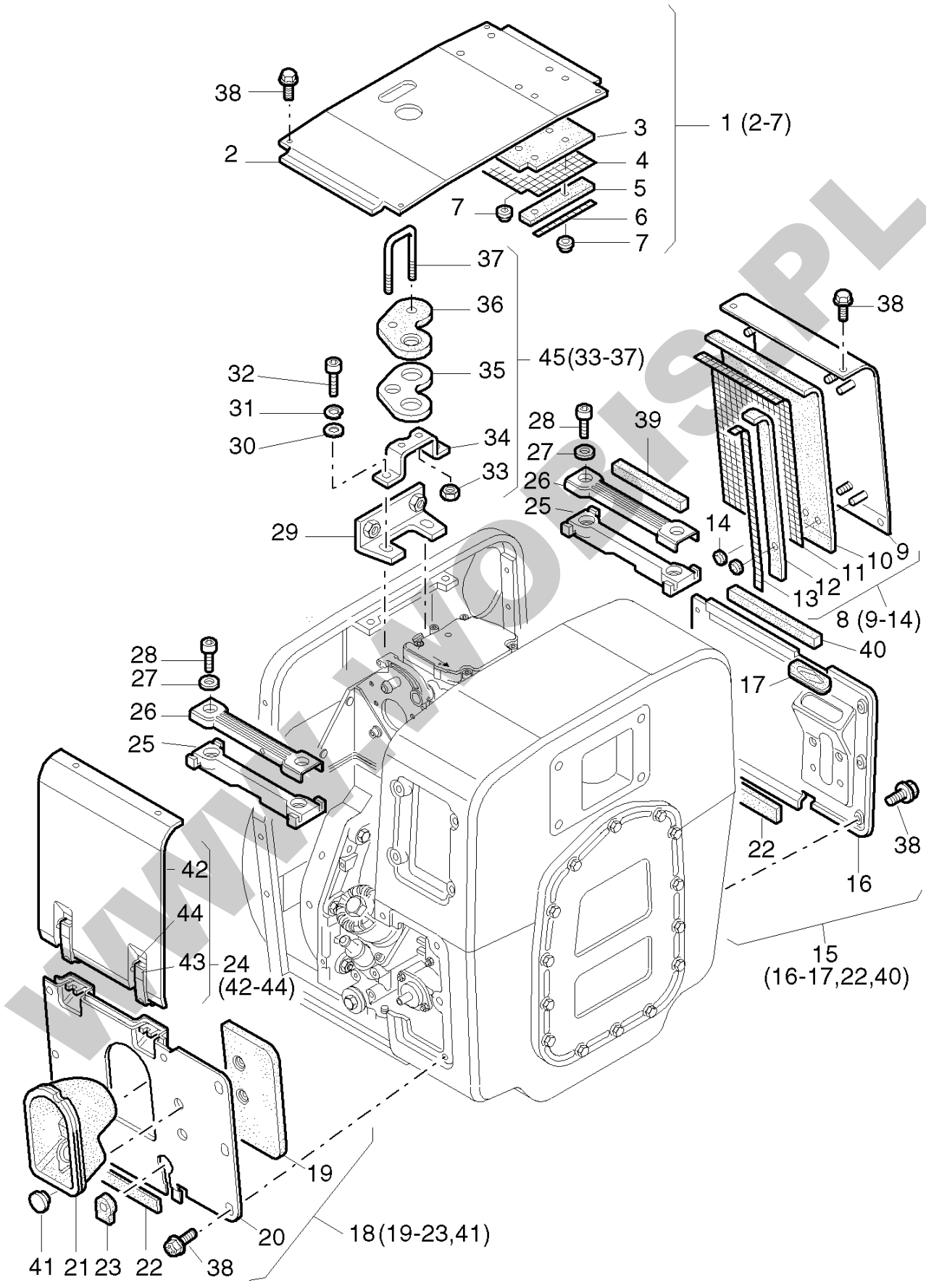
38
2
1 (2-7)
3
4
5
7
6
7
37
36
45(33-37)
35
32
31
30
34
33
28
27
26
25
39
38
29
14
9
10
11
12
13
8 (9-14)
40
28
27
26
25
17
22
38
16
42
44
43
24
(42-44)
15
(16-17,22,40)
19
20
18(19-23,41)
41
21
23
22
38

WWW.WOBIS.PL

| Pos. | Part no. | Description | Qty. | Notice | Add. notice | kg | EA | TA | DA | dDPW | List price |
|---|---|---|---|---|---|---|---|---|---|---|---|
| 1 | 01305500 | HOOD | 1 | | | 1,115 | 1 | 11 | 1 | | |
| 2 | _noorder | No single order | - | | | | | | | | |
| 3 | 04076000 | INSULATION BORD | 1 | | | 0,040 | 1 | 11 | 1 | | |
| 4 | 04076300 | FASTENING PLATE | 1 | | | 0,042 | 0 | 11 | 1 | | |
| 5 | 04076100 | INSULATION BORD | 1 | | | 0,004 | 1 | 11 | 1 | | |
| 6 | 04076200 | FIXING RAIL | 1 | | | 0,050 | 1 | 11 | 1 | | |
| 7 | 50388500 | HOLDING DISC 4,5 | 6 | 4,5 | | 0,002 | 4 | 11 | 1 | | |
| 8 | 01305800 | COWLING | 1 | | | 0,739 | 1 | 11 | 1 | | |
| 9 | _noorder | No single order | - | | | | | | | | |
| 10 | 04076600 | INSULATION PLATE | 1 | | | 0,066 | 1 | 11 | 1 | | |
| 11 | 04076800 | FASTENING PLATE | 1 | | | 0,070 | 1 | 11 | 1 | | |
| 12 | 04076700 | INSULATION PLATE | 1 | | | 0,009 | 1 | 11 | 1 | | |
| 13 | 04076900 | FIXING RAIL | 1 | | | 0,007 | 1 | 11 | 1 | | |
| 14 | 50388500 | HOLDING DISC 4,5 | 6 | 4,5 | | 0,002 | 4 | 11 | 1 | | |
| 15 | 01290000 | COWLING | 1 | | | 0,935 | 1 | 11 | 1 | | |
| 16 | _noorder | No single order | - | | | | | | | | |
| 17 | 03993100 | RUBBER SLEEVE | 1 | | | 0,014 | 1 | 11 | 1 | | |
| 18 | 01289800 | COWLING | 1 | | | 0,864 | 1 | 11 | 1 | | |
| 19 | 04087600 | INSULATION BORD | 1 | | | 0,032 | 1 | 11 | 1 | | |
| 20 | _noorder | No single order | - | | | | | | | | |
| 21 | 04076500 | RUBBER INSERT | 1 | | | 0,083 | 1 | 11 | 1 | | |
| 22 | 04086500 | SEALING STIP 182L | 1 | 13 x 1 x 182 mm | | 0,004 | 1 | 11 | 1 | | |
| 23 | 04084700 | SEALG.PLATE | 1 | | | 0,008 | 1 | 11 | 1 | | |
| 24 | 04084400 | COWLING | 1 | Dekompr.-Automatik | | 0,658 | 1 | 21 | 7 | | |
| 24 | 01289700 | SIDE PANAL | 1 | | | 0,670 | 1 | 11 | 1 | | |
| 25 | 04077300 | RUBBER STRIP | 2 | | | 0,066 | 0 | 11 | 1 | | |
| 26 | 01306100 | STIFFNER | 2 | | | 0,093 | 1 | 11 | 1 | | |
| 27 | 50081200 | SPRING WASHER A 6 | 4 | A 6 DIN 137 - A3C | | 0,001 | 4 | 11 | 1 | | |
| 28 | 50133000 | ALL.SCR.M 6X 12 | 4 | M 6 x 12 DIN 6912-8.8 | | 0,004 | 4 | 11 | 1 | | |
| 29 | 01307800 | SUPPORT | 1 | | | 0,023 | 1 | 21 | 1 | | |

WWW.WOBIS.PL

| Pos. | Part no. | Description | Qty. | Notice | Add. notice | kg | EA | TA | DA | dDPW | List price |
|---|---|---|---|---|---|---|---|---|---|---|---|
| 30 | 50148100 | FLAT WASHER 8,4 | 2 | 8,4 DIN 125-St A3C | | 0,002 | 4 | 11 | 1 | | |
| 31 | 50347301 | SPRING WASHER 8 | 2 | VHZ 8 A3C | | 0,001 | 4 | 11 | 1 | | |
| 32 | 50175900 | ALL.SCR.M 8X 30 | 2 | M 8 x 30 DIN 912-8.8 A3C | | 0,017 | 4 | 11 | 1 | | |
| 33 | 50328300 | HEXAGON NUT VM6 | 2 | VM 6 DIN 980-8 A3C | | 0,002 | 4 | 11 | 1 | | |
| 34 | 04061210 | LIFTING BRACKET | 1 | | | 0,065 | 1 | 11 | 1 | | |
| 35 | _noorder | No single order | - | | | | | | | | |
| 36 | 04061100 | SEALING PLATE | 1 | | | 0,002 | 1 | 11 | 1 | | |
| 37 | _noorder | No single order | - | | | | | | | | |
| 38 | 50289200 | HEXSCREW M 6X 12 | 26 | M 6 x 12 KZ 1-8.8 A3D | | 0,005 | 4 | 11 | 1 | | |
| 39 | 04077200 | SEALG.STRIP10X8X122 | 1 | 8 x 8 x 122 mm | | 0,003 | 1 | 11 | 1 | | |
| 40 | 04080000 | SEALG.STRIP10X8X160 | 1 | 8 x 8 x 160 mm | | 0,004 | 1 | 11 | 1 | | |
| 41 | 50395500 | COVER 17,6 | 2 | PHT 17, 6/20 | | 0,001 | 4 | 11 | 1 | | |
| 42 | _noorder | No single order | - | | | | | | | | |
| 43 | 50393200 | FASTENER | 2 | | | 0,029 | 4 | 11 | 1 | | |
| 44 | 50396100 | RIVET 2,5X 8 | 4 | 2,5 x 8 DIN 660-St<br>part was replaced by 50396101 | | 0,000 | 0 | 11 | 7 | | |
| 45 | 01290501 | LIFT.DEVICE 30/40C | 1 | | | 0,130 | 1 | 11 | 1 | | |
| | | | | | | | | | | | |
| | | | | | | | | | | | |
| | | | | | | | | | | | |
| | | | | | | | | | | | |
| | | | | | | | | | | | |
| | | | | | | | | | | | |
| | | | | | | | | | | | |
| | | | | | | | | | | | |
| | | | | | | | | | | | |
| | | | | | | | | | | | |
| | | | | | | | | | | | |
| | | | | | | | | | | | |
| | | | | | | | | | | | |
| | | | | | | | | | | | |

WWW.WOBIS.PL

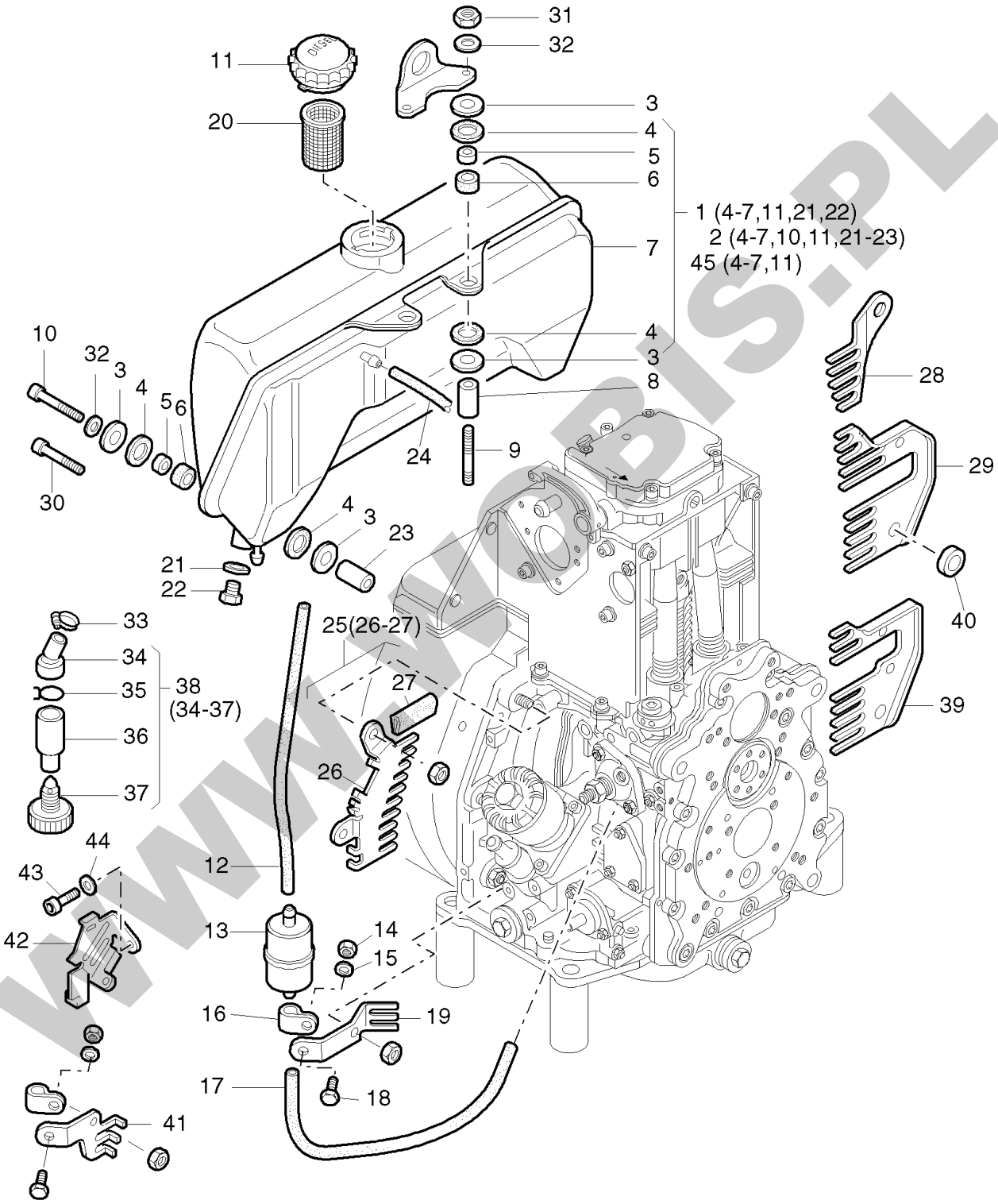
31
32
11
3
20
4
5
6
1 (4-7,11,21,22)
2 (4-7,10,11,21-23)
45 (4-7,11)
7
10
32
3
4
5
6
4
3
8
28
24
9
29
30
4
3
23
21
22
40
33
25(26-27)
34
27
35
38
(34-37)
39
36
26
37
44
43
12
42
13
14
15
16
19
17
18
41

WWW.WOBIS.PL

| Pos. | Part no. | Description | Qty. | Notice | Add. notice | kg | EA | TA | DA | dDPW | List price |
|---|---|---|---|---|---|---|---|---|---|---|---|
| 1 | 01535000 | FUEL TANK 5 LTRS | 1 | 5 l | | 2,908 | 1 | 22 | 1 | | |
| 2 | _nopart | Not in this engine | - | | | | | | | | |
| 3 | 05097600 | WASHER | 8 | 8,5 - 27 | | 0,007 | 1 | 11 | 1 | | |
| 4 | 03981802 | RUBBER WASHER | 8 | 17 - 25 | | 0,001 | 1 | 21 | 1 | | |
| 5 | 03981701 | BUSH 8,4X13X7,5 | 4 | 8,4 x 13 x 7,5 | | 0,005 | 1 | 21 | 1 | | |
| 6 | 03981900 | RUBBER SHELL | 4 | | | 0,001 | 1 | 21 | 1 | | |
| 7 | _noorder | No single order | - | | | | | | | | |
| 8 | 03981500 | BUSH 9X18X49 | 2 | 9 x 18 x 49 | | 0,073 | 1 | 21 | 1 | | |
| 9 | 50377001 | STUD M 8X 75 | 2 | M 8 x 75 DIN 835-10.9 A3C | | 0,033 | 4 | 21 | 1 | | |
| 10 | 50171600 | ALL.SCR.M 8X 65 | 2 | M 8 x 65 DIN 912-8.8 A3C | | 0,030 | 4 | 21 | 1 | | |
| 11 | 40032701 | CAP F.FUEL TANK B40 | 1 | B 40 | | 0,071 | 4 | 21 | 1 | | |
| 12 | 03493300 | FUEL HOSE 7 X 145 | 1 | 7 x 145<br>part was replaced by 03493310 | | 0,011 | 0 | 21 | 7 | | |
| 13 | 40089401 | FUEL FILT.(-6C/21F) | 1 | (10MY)<br>part was replaced by 50478800 | | 0,055 | 4 | 21 | 2 | | |
| 14 | 50144400 | HEXAGON NUT M 6 | 1 | M 6 DIN 934 - 8 A3C | | 0,002 | 4 | 11 | 1 | | |
| 15 | 50144500 | FLAT WASHER 6,4 | 1 | 6,4 DIN 125-St A3C | | 0,001 | 4 | 11 | 1 | | |
| 16 | 03165500 | PIPE CLIP | 1 | | | 0,005 | 1 | 11 | 1 | | |
| 17 | 03674300 | FUEL HOSE 7 X 305 | 1 | 7 x 305 mm | | 0,025 | 0 | 21 | 7 | | |
| 18 | 50165500 | HEXSCREW M 6X 12 | 1 | M 6 x 12 DIN 933-8.8 A3C | | 0,004 | 4 | 11 | 1 | | |
| 19 | _nopart | Not in this engine | - | | | | | | | | |
| 20 | 40037800 | SIEVE | 1 | f. Tank 5l B 40 | | 0,015 | 4 | 21 | 1 | | |
| 21 | 50001000 | JOINT A10 X16 | 1 | A 10 x 16 DIN 7603-Cu | | 0,008 | 4 | 11 | 1 | | |
| 22 | 05126000 | DRAIN PLUG | 1 | M 10 x 12 | | 0,018 | 1 | 21 | 1 | | |
| 23 | 03981600 | BUSH 9X18X38 | 2 | 9 x 18 x 38 | | 0,057 | 1 | 21 | 1 | | |
| 24 | 03663800 | FUEL HOSE 5,0 X 40 | 1 | 5 x 40 mm | | 0,002 | 9 | 11 | 0 | | |
| 25 | _nopart | Not in this engine | - | | | | | | | | |
| 26 | _nopart | Not in this engine | - | | | | | | | | |
| 27 | _nopart | Not in this engine | - | | | | | | | | |
| 28 | _nopart | Not in this engine | - | | | | | | | | |
| 29 | _nopart | Not in this engine | - | | | | | | | | |

WWW.WOBIS.PL

| Pos. | Part no. | Description | Qty. | Notice | Add. notice | kg | EA | TA | DA | dDPW | List price |
|---|---|---|---|---|---|---|---|---|---|---|---|
| 30 | _nopart | Not in this engine | - | | | | | | | | |
| 31 | 50148000 | HEXAGON NUT M 8 | 2 | M 8 DIN 934-8 A3C | | 0,005 | 4 | 11 | 1 | | |
| 32 | 50208500 | SPRING WASHER 8 | 4 | 8 DIN 128 A3C | | 0,001 | 4 | 11 | 1 | | |
| 33 | 50448000 | CLAMP | 1 | | | 0,008 | 4 | 21 | 1 | | |
| 34 | 05044001 | HOSE 20/12 MM | 1 | | | 0,003 | 1 | 21 | 1 | | |
| 35 | 05036900 | HOSE CLIP | 1 | | | 0,003 | 4 | 11 | 1 | | |
| 36 | 05043900 | WATER SEPARATOR | 1 | part was replaced by 05043901 | | 0,012 | 0 | 21 | 0 | | |
| 37 | 50414800 | CLOS. SCREW M 10 | 1 | M 10 | | 0,007 | 4 | 21 | 1 | | |
| 38 | 01519401 | WATER SEPARATOR | 1 | part was replaced by 01519402 | | 0,033 | 0 | 21 | 0 | | |
| 39 | 01529000 | PROT.GUARD D30...41 | 1 | | | 0,070 | 1 | 21 | 1 | | |
| 40 | 04065100 | DISC 9,1X20X2,1 | 1 | 9,1 x 20 x 2,1 | | 0,003 | 1 | 11 | 1 | | |
| 41 | 05036600 | GUARD BELOW | 1 | | | 0,045 | 1 | 11 | 1 | | |
| 42 | 05036701 | GUARD | 1 | | | 0,049 | 1 | 11 | 1 | | |
| 43 | 50139000 | ALL.SCR. M 6X 10 | 1 | M 6 x 10 DIN 912-8.8 C4P | | 0,004 | 4 | 11 | 1 | | |
| 44 | 50081200 | SPRING WASHER A 6 | 1 | A 6 DIN 137 - A3C | | 0,001 | 4 | 11 | 1 | | |
| 45 | _nopart | Not in this engine | - | | | | | | | | |

WWW.WOBIS.PL

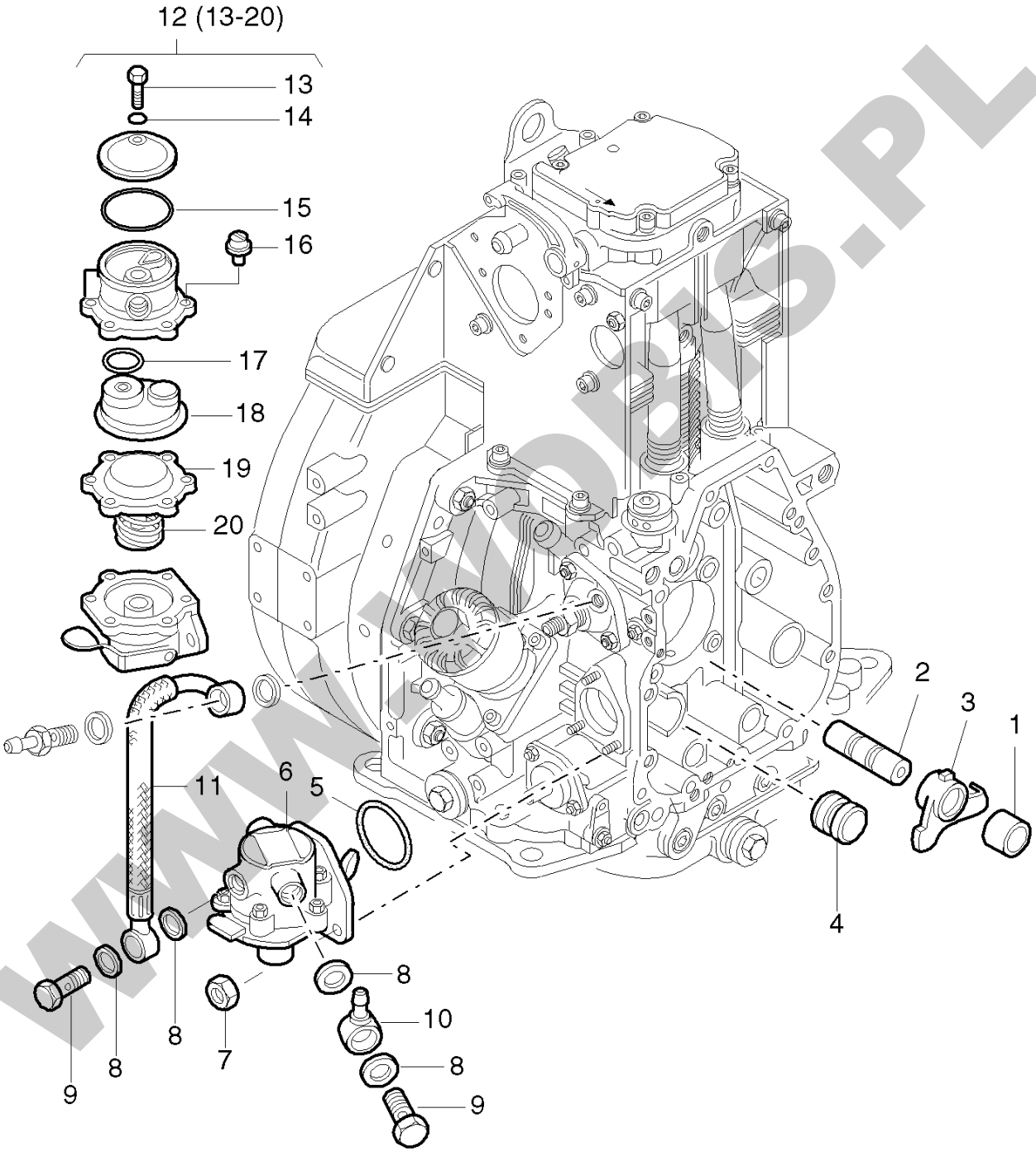


WWW.WOBIS.PL

| Pos. | Part no. | Description | Qty. | Notice | Add. notice | kg | EA | TA | DA | dDPW | List price |
|---|---|---|---|---|---|---|---|---|---|---|---|
| 1 | 04011900 | BUSH | 1 | 15x24x17 | | 0,050 | 1 | 11 | 1 | | |
| 2 | 03796401 | SHAFT | 1 | | | 0,072 | 1 | 11 | 1 | | |
| 3 | 04011810 | LEVER F.FEED PUMP | 1 | | | 0,090 | 1 | 21 | 4 | | |
| 4 | 04023600 | PLUG | 1 | ø 25 mm | | 0,020 | 1 | 11 | 1 | | |
| 5 | 50331800 | O-RING 35 X 2,8 | 1 | 35 x 2,8 | | 0,001 | 4 | 21 | 1 | | |
| 6 | 50332302 | FUEL FEED PUMP | 1 | part was replaced by 05301500 | | 0,284 | 0 | 21 | 1 | | |
| 7 | 50328300 | HEXAGON NUT VM6 | 3 | VM 6 DIN 980-8 A3C | | 0,002 | 4 | 11 | 1 | | |
| 8 | 50001200 | JOINT A14 X18 | 4 | A 14 x 18 DIN 7603-Cu | | 0,001 | 4 | 11 | 1 | | |
| 9 | 50006400 | BANJO BOLT 10-3 | 2 | 10-3 DIN 7643 | | 0,029 | 4 | 11 | 1 | | |
| 10 | 50015900 | RING PIECE NW8 | 1 | NW 8 / 6 | | 0,025 | 4 | 11 | 1 | | |
| 11 | 01468801 | FUEL PIPE | 1 | | | 0,070 | 1 | 21 | 5 | | |
| 12 | 49062501 | VALV.PLAT.W. O-RING | 1 | Reparatursatz, repair kit | | 0,075 | 4 | 23 | 0 | | |
| 13 | _noorder | No single order | - | | | | | | | | |
| 14 | _noorder | No single order | - | | | | | | | | |
| 15 | 50399500 | O-RING 37 X 2,5 | 1 | 37 x 2,5 | | 0,001 | 9 | 21 | 0 | | |
| 16 | _noorder | No single order | - | | | | | | | | |
| 17 | _noorder | No single order | - | | | | | | | | |
| 18 | _noorder | No single order | - | | | | | | | | |
| 19 | _noorder | No single order | - | | | | | | | | |
| 20 | _noorder | No single order | - | | | | | | | | |
| | | | | | | | | | | | |
| | | | | | | | | | | | |
| | | | | | | | | | | | |
| | | | | | | | | | | | |
| | | | | | | | | | | | |
| | | | | | | | | | | | |
| | | | | | | | | | | | |
| | | | | | | | | | | | |
| | | | | | | | | | | | |
| | | | | | | | | | | | |

WWW.WOBIS.PL

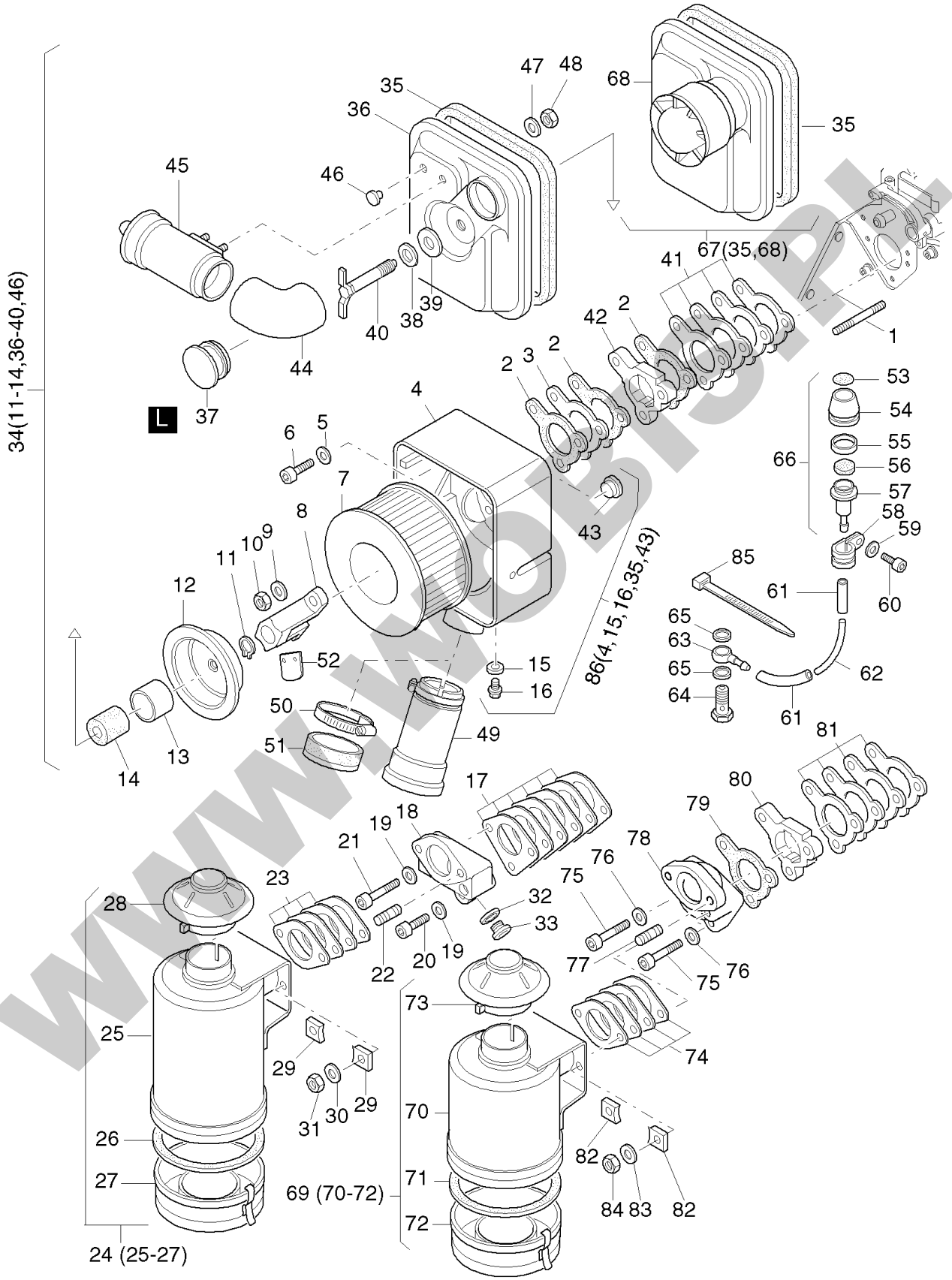


WWW.WOBIS.PL

| Pos. | Part no. | Description | Qty. | Notice | Add. notice | kg | EA | TA | DA | dDPW | List price |
|---|---|---|---|---|---|---|---|---|---|---|---|
| 1 | 50038900 | STUD M 8X 60 | 2 | M 8 x 60 DIN 855-8.8 | | 0,025 | 4 | 21 | 1 | | |
| 2 | 04029800 | GASKET | 2 | | | 0,001 | 1 | 21 | 1 | | |
| 3 | 04029701 | INSULATING FLANGE | 1 | | | 0,011 | 1 | 21 | 1 | | |
| 4 | _noorder | No single order | - | | | | | | | | |
| 5 | 50095100 | SPRING WASHER A 8 | 1 | A 8 DIN 137 A3C | | 0,001 | 4 | 11 | 1 | | |
| 6 | 50080800 | ALL.SCREW M 8X42 | 1 | M 8 x 42 DIN 912-8.8 | | 0,022 | 4 | 11 | 1 | | |
| 7 | 04030100 | AIRFILTER ELEMENT | 1 | | | 0,200 | 4 | 21 | 1 | | |
| 8 | 01490900 | RETAINING BRACKET | 1 | | | 0,000 | 0 | 21 | 7 | | |
| 9 | 50148100 | FLAT WASHER 8,4 | 2 | 8,4 DIN 125-St A3C | | 0,002 | 4 | 11 | 1 | | |
| 10 | 50129500 | HEXAGON NUT M 8 | 2 | M 8 DIN 985-8 A3C | | 0,002 | 4 | 11 | 1 | | |
| 11 | 50412000 | CIRCLIP 10 X 1 | 1 | A 10 x 1 DIN 471 | | 0,001 | 4 | 11 | 1 | | |
| 12 | 05039200 | CENTRING COVER | 1 | | | 0,304 | 1 | 21 | 1 | | |
| 13 | 05039300 | BUSH 33X35X23,5 | 1 | 33 x 35 x 23,5 | | 0,019 | 1 | 21 | 1 | | |
| 14 | 03579400 | SEALING RING | 1 | | | 0,012 | 1 | 11 | 1 | | |
| 15 | 50000900 | JOINT A8X11,5 | 1 | A 8 x 11,5 DIN 7603-Cu | | 0,001 | 4 | 11 | 1 | | |
| 16 | 50137900 | CLOS.SCREW M8X1 | 1 | M 8 x 1 DIN 7604 | | 0,006 | 4 | 11 | 1 | | |
| 17 | _nopart | Not in this engine | - | | | | | | | | |
| 18 | _nopart | Not in this engine | - | | | | | | | | |
| 19 | _nopart | Not in this engine | - | | | | | | | | |
| 20 | _nopart | Not in this engine | - | | | | | | | | |
| 21 | _nopart | Not in this engine | - | | | | | | | | |
| 22 | _nopart | Not in this engine | - | | | | | | | | |
| 23 | _nopart | Not in this engine | - | | | | | | | | |
| 24 | _nopart | Not in this engine | - | | | | | | | | |
| 25 | _nopart | Not in this engine | - | | | | | | | | |
| 26 | _nopart | Not in this engine | - | | | | | | | | |
| 27 | _nopart | Not in this engine | - | | | | | | | | |
| 28 | _nopart | Not in this engine | - | | | | | | | | |
| 29 | _nopart | Not in this engine | - | | | | | | | | |
| 30 | _nopart | Not in this engine | - | | | | | | | | |

WWW.WOBIS.PL

| Pos. | Part no. | Description | Qty. | Notice | Add. notice | kg | EA | TA | DA | dDPW | List price |
|---|---|---|---|---|---|---|---|---|---|---|---|
| 31 | _nopart | Not in this engine | - | | | | | | | | |
| 32 | _nopart | Not in this engine | - | | | | | | | | |
| 33 | _nopart | Not in this engine | - | | | | | | | | |
| 34 | 01449710 | COVER F. AIRFILTER | 1 | | | 0,772 | 1 | 21 | 1 | | |
| 35 | 04061501 | SEALING STR. 626 MM | 1 | 630 mm | | 0,110 | 1 | 21 | 1 | | |
| 36 | _noorder | No single order | - | | | | | | | | |
| 37 | 05039402 | CLOSING COVER | 1 | | | 0,012 | 1 | 21 | 1 | | |
| 38 | 03814100 | INSULATING DISC | 1 | | | 0,002 | 1 | 21 | 1 | | |
| 39 | 05038700 | WASHER 11 X 36 X 3 | 1 | 11 x 36 x 3 | | 0,022 | 1 | 21 | 1 | | |
| 40 | 01490800 | WING SCREW | 1 | | | 0,074 | 1 | 21 | 1 | | |
| 41 | 01449100 | GASKET AIRFILTER | 1 | | | 0,030 | 1 | 21 | 1 | | |
| 42 | 04053101 | INTERMEDIATE FLANGE | 1 | | | 0,069 | 1 | 21 | 1 | | |
| 43 | 50395700 | COVER 15 | 1 | 15 PHT | | 0,001 | 9 | 11 | 0 | | |
| 44 | 05038910 | ELBOW F. CYCLON | 1 | | | 0,087 | 1 | 21 | 2 | | |
| 45 | 01491010 | CYCLONE | 1 | | | 0,258 | 4 | 21 | 2 | | |
| 46 | 50411900 | CLOSING PLUG 7 | 2 | F 2 PHT SCHW. | | 0,001 | 4 | 21 | 1 | | |
| 47 | 50120000 | DISC A 6,4 | 2 | A 6,4 DIN 9021-St A3C | | 0,003 | 4 | 11 | 1 | | |
| 48 | 40028300 | HEX.NUT M 6 | 2 | VM 6 DIN 980 C3P | | 0,003 | 4 | 11 | 1 | | |
| 49 | 01471200 | CYCLONE | 1 | | | 0,279 | 1 | 21 | 4 | | |
| 50 | 50406600 | HOSE CLIP 40/60 | 1 | 40 / 60 | | 0,036 | 4 | 21 | 1 | | |
| 51 | 01481400 | CAP AIR INTAKE | 1 | | | 0,044 | 1 | 21 | 1 | | |
| 52 | 05033500 | VALVE PLATE | 1 | | | 0,001 | 1 | 21 | 1 | | |
| 53 | 05044501 | INDIC. PLATE | 1 | | | 0,001 | 1 | 21 | 1 | | |
| 54 | 05043601 | RUBBER CAP | 1 | | | 0,002 | 1 | 21 | 1 | | |
| 55 | 05045600 | SIGNAL RING | 1 | (grün, green, vert, verde) | | 0,001 | 1 | 21 | 1 | | |
| 56 | 05137200 | FILTER | 1 | Filter, Filtre, Filtro ø 20 mm | | 0,001 | 1 | 21 | 1 | | |
| 57 | 05043700 | ADAPTER | 1 | | | 0,014 | 1 | 21 | 1 | | |
| 58 | 50173500 | PIPE CLIP | 1 | 10 / 15 | | 0,010 | 4 | 11 | 1 | | |
| 59 | 50170900 | SPRING WASHER 6 | 1 | 6 DIN 128 - A3C | | 0,001 | 4 | 11 | 1 | | |
| 60 | 50170600 | ALL.SCR.M 6X 20 | 1 | M 6 x 20 DIN 912-8.8 A3C | | 0,007 | 4 | 11 | 1 | | |

WWW.WOBIS.PL

| Pos. | Part no. | Description | Qty. | Notice | Add. notice | kg | EA | TA | DA | dDPW | List price |
|---|---|---|---|---|---|---|---|---|---|---|---|
| 61 | 03961400 | FUEL HOSE 3,5 X 50 | 2 | 3,5 x 50 | | 0,002 | 9 | 21 | 0 | | |
| 62 | 05044600 | HOSE 2 X 4 X 100 | 1 | 2 x 4 x 100 | | 0,003 | 1 | 21 | 3 | | |
| 63 | 50015700 | RING PIECE NW3 | 1 | NW 3 | | 0,007 | 4 | 11 | 1 | | |
| 64 | 50006100 | BANJO BOLT 4-5-3 | 1 | 4-5-3 DIN 7643 | | 0,007 | 4 | 11 | 1 | | |
| 65 | 50000900 | JOINT A8X11,5 | 2 | A 8 x 11,5 DIN 7603-Cu | | 0,001 | 4 | 11 | 1 | | |
| 66 | 01499801 | MAINT.INDICATOR | 1 | | | 0,026 | 1 | 21 | 1 | | |
| 67 | 01539300 | COVER F. AIRFILTER | 1 | | | 0,470 | 4 | 22 | 2 | | |
| 68 | _noorder | No single order | - | | | | | | | | |
| 69 | 01410801 | OILBATH AIRFILTER | 1 | | | 1,550 | 4 | 21 | 4 | | |
| 70 | _noorder | No single order | - | | | | | | | | |
| 71 | 49061900 | GASKET | 1 | | | 0,010 | 4 | 23 | 1 | | |
| 72 | 49061800 | OIL CONTAINER | 1 | | | 0,240 | 4 | 23 | 1 | | |
| 73 | 40040400 | RAIN PROTCT.CAP54MM | 1 | | | 0,065 | 4 | 11 | 1 | | |
| 74 | 01154000 | GASKET OILBATH AIRF | 1 | | | 0,016 | 1 | 21 | 0 | | |
| 75 | 50171600 | ALL.SCR.M 8X 65 | 3 | M 8 x 65 DIN 912-8.8 A3C | | 0,030 | 4 | 21 | 1 | | |
| 76 | 50095100 | SPRING WASHER A 8 | 3 | A 8 DIN 137 A3C | | 0,001 | 4 | 11 | 1 | | |
| 77 | 50285100 | STUD M8X25 | 2 | M 8 x 25 DIN 835 - 10.9 | | 0,013 | 4 | 11 | 0 | | |
| 78 | 05063601 | INTERMEDIATE FLANGE | 1 | | | 0,552 | 9 | 21 | 0 | | |
| 79 | 04029800 | GASKET | 1 | | | 0,001 | 1 | 21 | 1 | | |
| 80 | 04053100 | INTERMEDIATE FLANGE | 1 | part was replaced by 04053101 | | 0,070 | 0 | 21 | 7 | | |
| 81 | 01449100 | GASKET AIRFILTER | 1 | | | 0,030 | 1 | 21 | 1 | | |
| 82 | 03903700 | SPACER | 2 | | | 0,049 | 1 | 21 | 0 | | |
| 83 | 50285200 | SPRING WASHER 8 | 2 | A3C | | 0,001 | 4 | 11 | 0 | | |
| 84 | 40028400 | HEX.NUT M 8 | 2 | VM 8 DIN 980-8 C3A | | 0,008 | 4 | 11 | 1 | | |
| 85 | 50358400 | STRAP | 1 | 200 x 4,8 mm SCHWARZ | | 0,001 | 4 | 11 | 1 | | |
| 86 | 01498300 | AIRFILTER HOUSING | 1 | part was replaced by 01498301 | | 1,105 | 0 | 21 | 7 | | |
| L | 50256600 | SILICON SEALER | 1 | | | 0,130 | 4 | 12 | 0 | | |
| | | | | | | | | | | | |
| | | | | | | | | | | | |
| | | | | | | | | | | | |

WWW.WOBIS.PL

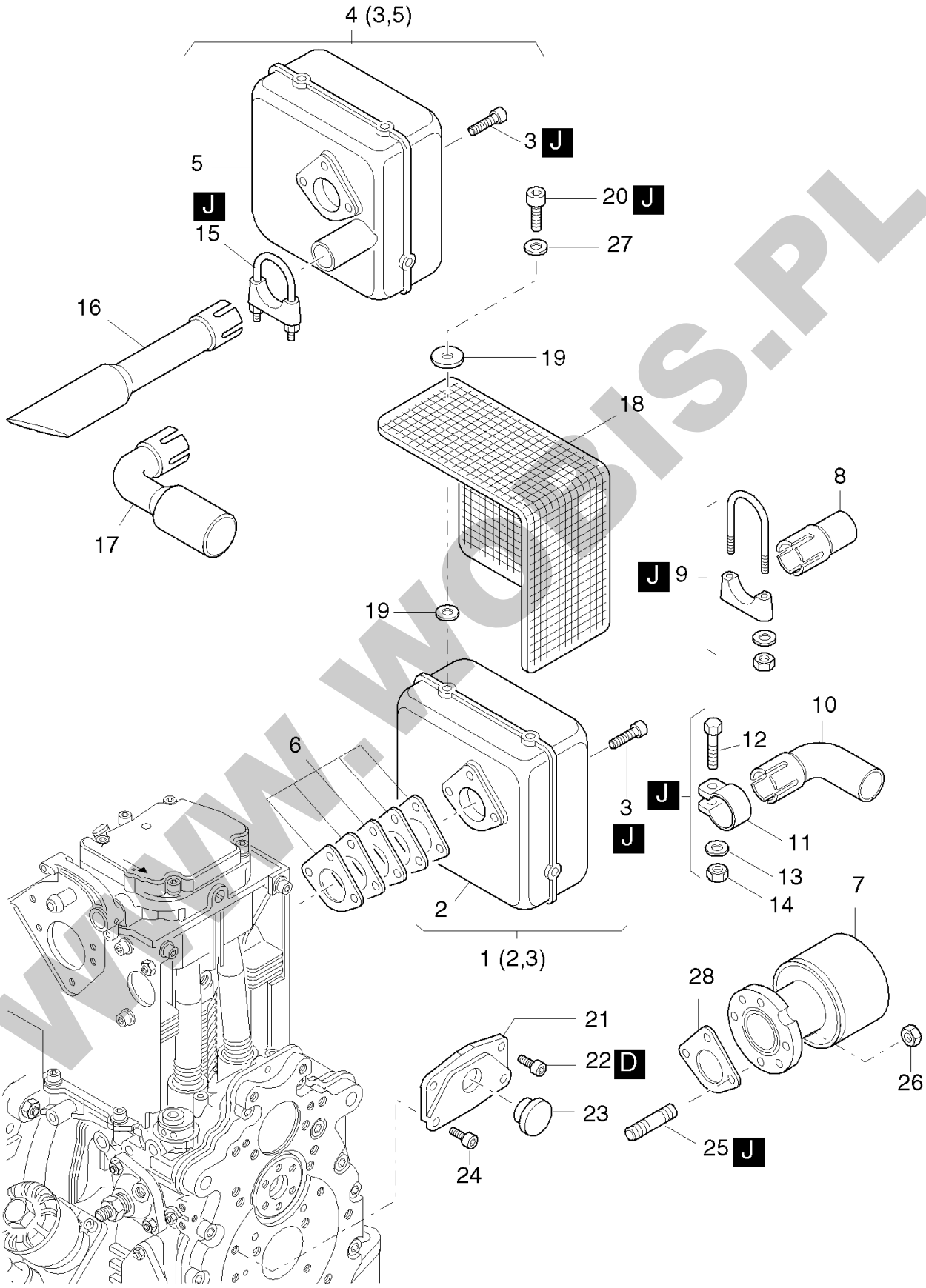
4 (3,5)
5
3 J
J
15
20 J
27
16
19
18
17
8
J 9
19
6
10
12
3
J
J
11
13
14
2
7
1 (2,3)
28
21
22 D
23
24
25 J
26

WWW.WOBIS.PL

| Pos. | Part no. | Description | Qty. | Notice | Add. notice | kg | EA | TA | DA | dDPW | List price |
|---|---|---|---|---|---|---|---|---|---|---|---|
| 1 | 01558600 | EXHAUST SILENCER | 1 | | | 3,645 | 1 | 22 | 1 | | |
| 2 | _noorder | No single order | - | | | | | | | | |
| 3 | 50403900 | ALL.SCR.M 8 X 25 | 3 | M 8 x 25 DIN 912-8.8 C4P | | 0,015 | 4 | 21 | 1 | | |
| 4 | 01507700 | EXHAST.SILENC. TOP | 1 | | | 3,651 | 1 | 22 | 1 | | |
| 5 | _noorder | No single order | - | | | | | | | | |
| 6 | 01489310 | GASK.SET EXHSAUST S | 1 | | | 0,040 | 1 | 21 | 4 | | |
| 7 | 01500900 | EXHAUST SILENCER | 1 | part was replaced by 01500901 | | 0,000 | 0 | 21 | 7 | | |
| 8 | 03998300 | EXHAUST TUBE | 1 | | | 0,112 | 1 | 21 | 4 | | |
| 9 | 00873100 | PIPE CLIP 40/42 | 1 | 40 / 42 | | 0,108 | 4 | 21 | 2 | | |
| 10 | 03740800 | EXHAUST ELBOW | 1 | ø 38<br>part was replaced by 03740801 | | 0,140 | 0 | 21 | 7 | | |
| 11 | 03740900 | PIPE CLIP 41,5 | 1 | 41,5 mm | | 0,087 | 1 | 21 | 1 | | |
| 12 | 50380000 | HEXSCREW M 8 X 50 | 1 | M 8 x 50 DIN 931-8.8 A3C<br>part was replaced by 50028100 | | 0,025 | 4 | 21 | 1 | | |
| 13 | 50148100 | FLAT WASHER 8,4 | 1 | 8,4 DIN 125-St A3C | | 0,002 | 4 | 11 | 1 | | |
| 14 | 40028400 | HEX.NUT M 8 | 1 | VM 8 DIN 980-8 C3A | | 0,008 | 4 | 11 | 1 | | |
| 15 | 50388000 | PIPE CLIP 1 1/8-28 | 1 | 1/8-28 883-2 A3C | | 0,103 | 4 | 21 | 2 | | |
| 16 | 03997301 | EXHAUST TUBE | 1 | | | 0,253 | 1 | 21 | 2 | | |
| 17 | 03997200 | EXHAUST ELBOW | 1 | | | 0,245 | 1 | 21 | 2 | | |
| 18 | 05140700 | GUARD | 1 | | | 0,330 | 1 | 21 | 1 | | |
| 19 | 05034200 | SPRING WASHER | 8 | 6,5 x 38 | | 0,011 | 0 | 21 | 7 | | |
| 20 | 50255700 | ALL.SCR.M 6X 12 | 4 | M 6 x12 DIN 912-8.8 C4A | | 0,005 | 4 | 21 | 1 | | |
| 21 | 03985300 | GUARD | 1 | | | 0,056 | 1 | 21 | 2 | | |
| 22 | 50135700 | ALL.SCR.M10X 16 | 2 | M 10 x 16 DIN 912-8.8 A3C | | 0,021 | 4 | 21 | 1 | | |
| 23 | 40091400 | CLOSING CAP | 1 | F24 SCHW. | | 0,004 | 4 | 21 | 2 | | |
| 24 | 50165400 | ALL.SCR.M 8X 16 | 2 | M 8 x 16 DIN 912-8.8 A3C | | 0,009 | 4 | 21 | 1 | | |
| 25 | 50037800 | STUD M 8X 22 | 2 | M 8 x 22 DIN 835-10.9 | | 0,012 | 4 | 11 | 1 | | |
| 26 | 40028400 | HEX.NUT M 8 | 2 | VM 8 DIN 980-8 C3A | | 0,008 | 4 | 11 | 1 | | |
| 27 | 50120000 | DISC A 6,4 | 4 | A 6,4 DIN 9021-St A3C | | 0,003 | 4 | 11 | 1 | | |
| 28 | 03974100 | GASKET | 9 | | | 0,007 | 0 | 21 | 1 | | |
| D | 50223300 | LOCTITE 221 | 1 | 50 ML | | 0,077 | 4 | 12 | 0 | | |

WWW.WOBIS.PL

| Pos. | Part no. | Description | Qty. | Notice | Add. notice | kg | EA | TA | DA | dDPW | List price |
|---|---|---|---|---|---|---|---|---|---|---|---|
| J | 50283004 | HIGH TEMP.PASTE | 1 | | | 0,110 | 4 | 12 | 0 | | |

WWW.WOBIS.PL

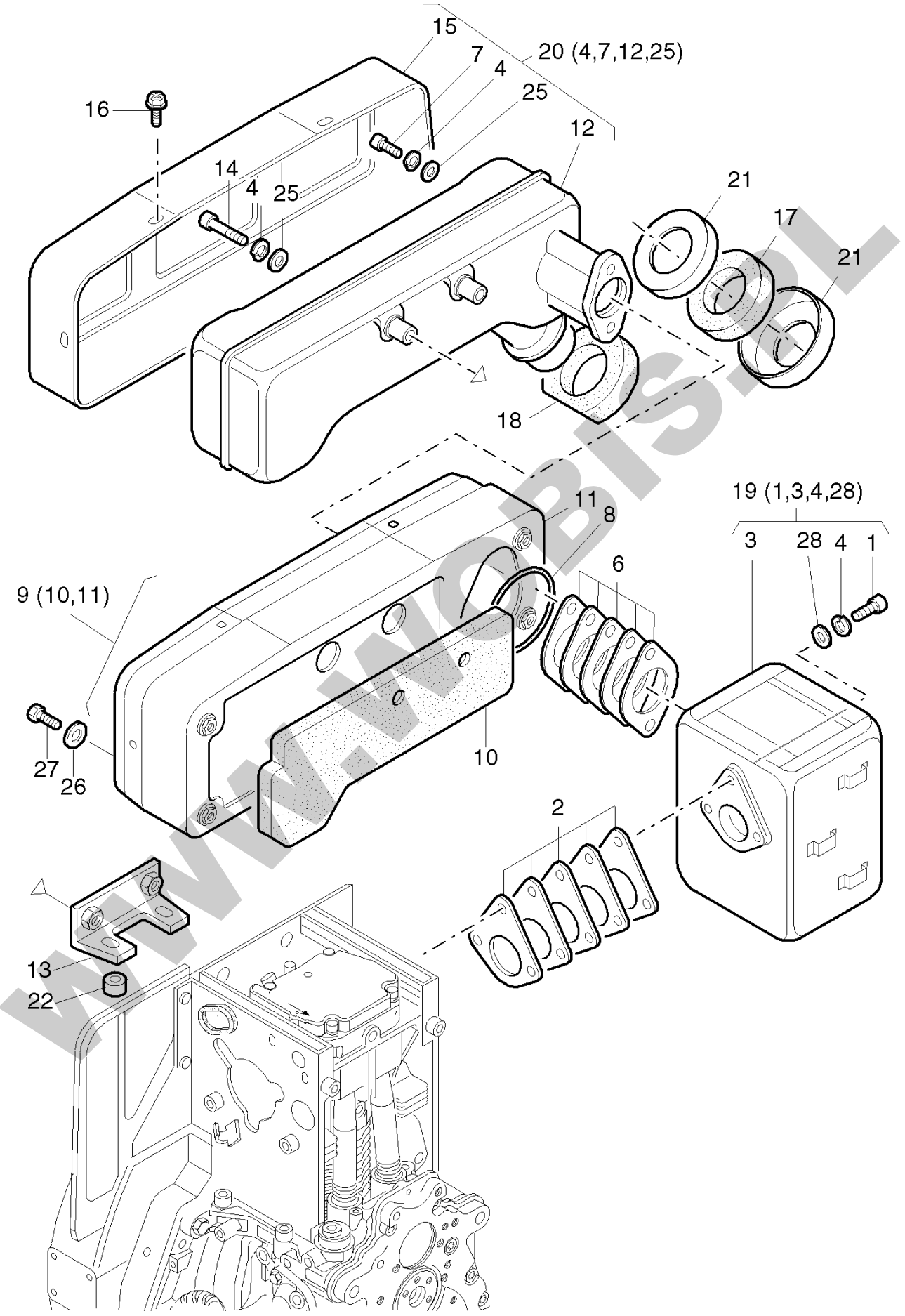
15
7
4
20 (4,7,12,25)
25
16
12
14
4
25
21
17
21
18
19 (1,3,4,28)
11
8
3
28
4
1
6
9 (10,11)
10
27
26
2
13
22

WWW.WOBIS.PL

| Pos. | Part no. | Description | Qty. | Notice | Add. notice | kg | EA | TA | DA | dDPW | List price |
|---|---|---|---|---|---|---|---|---|---|---|---|
| 1 | 50429600 | ALL.SCREW M 8 X 35 | 3 | M 8 x 35 DIN 912-8.8 C4P | | 0,015 | 4 | 21 | 1 | | |
| 2 | 01427900 | GASKET EXHAUST SIL. | 1 | | | 0,030 | 1 | 21 | 1 | | |
| 3 | _noorder | No single order | - | | | | | | | | |
| 4 | 50347301 | SPRING WASHER 8 | 7 | VHZ 8 A3C | | 0,001 | 4 | 11 | 1 | | |
| 6 | 01309300 | GASK.SET EXHST.SIL. | 1 | | | 0,040 | 1 | 21 | 1 | | |
| 7 | 50403900 | ALL.SCR.M 8 X 25 | 2 | M 8 x 25 DIN 912-8.8 C4P | | 0,015 | 4 | 21 | 1 | | |
| 8 | _nopart | Not in this engine | - | | | | | | | | |
| 9 | 01309400 | EXHAUST CAPS.INSIDE | 1 | | | 1,118 | 1 | 21 | 1 | | |
| 10 | 04078800 | INSULATION PLATE | 1 | | | 0,008 | 1 | 21 | 1 | | |
| 11 | _noorder | No single order | - | | | | | | | | |
| 12 | _noorder | No single order | - | | | | | | | | |
| 13 | 01307800 | SUPPORT | 1 | | | 0,023 | 1 | 21 | 1 | | |
| 14 | 50404100 | ALL.SCREW M 8 X 60 | 2 | M 8 x 60 DIN 912-8.8 C4P | | 0,030 | 4 | 21 | 1 | | |
| 15 | 01307501 | EXHAUST CAPS.OUTSID | 1 | | | 0,855 | 1 | 21 | 1 | | |
| 16 | 50289200 | HEXSCREW M 6X 12 | 8 | M 6 x 12 KZ 1-8.8 A3D | | 0,005 | 4 | 11 | 1 | | |
| 17 | 04079500 | SEALING RING | 1 | 33 x 62x 15 | | 0,001 | 1 | 21 | 1 | | |
| 18 | _noorder | No single order | - | | | | | | | | |
| 19 | 01309600 | PRE SILENCER "C" | 1 | | | 4,183 | 1 | 12 | 0 | | |
| 20 | 01309500 | SILENCER "C" | 1 | | | 3,566 | 1 | 12 | 1 | | |
| 21 | 04079400 | CENTRING DISC | 2 | | | 0,014 | 1 | 21 | 1 | | |
| 22 | 04064600 | BUSH | 2 | 8,4 x 19 x 5,5 | | 0,010 | 1 | 21 | 1 | | |
| 25 | 50115700 | DISC 8,4 | 4 | 8,4 DIN433-St 140 HV | | 0,002 | 4 | 11 | 1 | | |
| 26 | _nopart | Not in this engine | - | | | | | | | | |
| 27 | _nopart | Not in this engine | - | | | | | | | | |
| 28 | 50115700 | DISC 8,4 | 3 | 8,4 DIN433-St 140 HV | | 0,002 | 4 | 11 | 1 | | |
| | | | | | | | | | | | |
| | | | | | | | | | | | |
| | | | | | | | | | | | |
| | | | | | | | | | | | |
| | | | | | | | | | | | |

WWW.WOBIS.PL

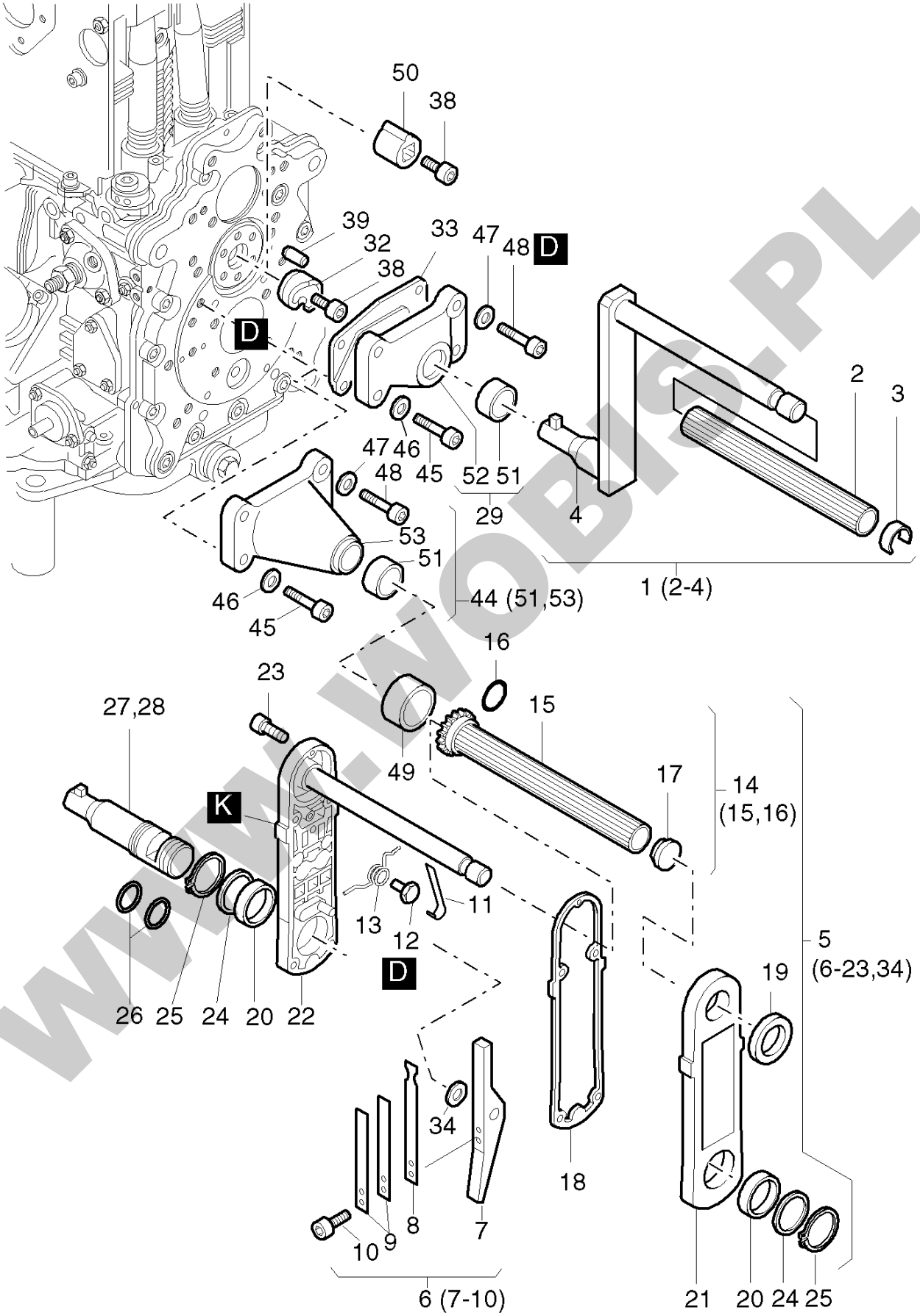
50
38
39
32
33
47
48
D
38
D
2
3
47
46
45
52
51
48
29
4
53
51
46
45
44 (51,53)
1 (2-4)
16
23
27,28
15
49
17
14
(15,16)
K
11
13
12
D
5
(6-23,34)
19
26
25
24
20
22
34
18
8
7
9
10
6 (7-10)
21
20
24
25

WWW.WOBIS.PL

| Pos. | Part no. | Description | Qty. | Notice | Add. notice | kg | EA | TA | DA | dDPW | List price |
|---|---|---|---|---|---|---|---|---|---|---|---|
| 1 | 01248002 | STARTING HANDLE 80 | 1 | 80 mm | | 1,350 | 1 | 21 | 2 | | |
| 1 | 01426502 | STARTING HANDLE 140 | 1 | 140 mm | | 1,450 | 1 | 21 | 4 | | |
| 1 | 01426702 | STARTING HANDLE 160 | 1 | 160 mm | | 1,500 | 1 | 21 | 4 | | |
| 1 | 01433202 | STARTING HANDLE 275 | 1 | 275 mm | | 1,870 | 1 | 21 | 4 | | |
| 1 | 01469800 | STARTING HANDLE 330 | 1 | 330 mm | | 2,370 | 1 | 21 | 0 | | |
| 1 | 01407302 | STARTING HANDLE 200 | 1 | 200 mm | | 1,600 | 1 | 21 | 4 | | |
| 2 | 03522400 | HANDLE | 1 | | | 0,050 | 1 | 21 | 2 | | |
| 3 | 03515400 | SNAP RING | 1 | | | 0,001 | 1 | 21 | 2 | | |
| 4 | _noorder | No single order | - | | | | | | | | |
| 5 | 01027805 | CR.HANDLE-SAFETY A | 1 | "A" | | 1,440 | 1 | 21 | 1 | | |
| 6 | 01011404 | LEVER | 1 | | | 0,125 | 1 | 21 | 1 | | |
| 7 | _noorder | No single order | - | | | | | | | | |
| 8 | 03812102 | PLATE SPRING | 1 | | | 0,007 | 1 | 21 | 1 | | |
| 9 | 03917100 | PLATE SPRING | 1 | | | 0,006 | 1 | 21 | 1 | | |
| 10 | 50316500 | ALL.SCREW M 5X 8 | 2 | M 5 x 8 DIN 6912-8.8 A3C | | 0,002 | 4 | 11 | 1 | | |
| 11 | 03954900 | PLATE SPRING | 1 | | | 0,005 | 1 | 21 | 1 | | |
| 12 | 03955600 | HEXSCREW | 1 | | | 0,003 | 1 | 21 | 1 | | |
| 13 | 03955900 | SPRING A | 1 | "A" | | 0,002 | 1 | 21 | 1 | | |
| 14 | 01011310 | HANDLE CPL. | 1 | | | 0,100 | 1 | 22 | 0 | | |
| 15 | _noorder | No single order | - | | | | | | | | |
| 16 | 50169100 | O-RING19 X 1,8 | 1 | 19 x 1,8 | | 0,001 | 4 | 21 | 1 | | |
| 17 | 50199200 | CLOSING PLUG | 1 | V18 NATUR | | 0,002 | 4 | 21 | 1 | | |
| 18 | 03813000 | GASKET | 1 | | | 0,001 | 1 | 21 | 1 | | |
| 19 | 50194200 | OIL SEAL 28X35X4 | 1 | 28 x 35 x 4 | | 0,004 | 4 | 21 | 1 | | |
| 20 | 50193400 | BUSH | 2 | | | 0,014 | 4 | 11 | 1 | | |
| 21 | _noorder | No single order | - | | | | | | | | |
| 22 | _noorder | No single order | - | | | | | | | | |
| 23 | 50194400 | ALL.SCR.M 6X 25 | 5 | M 6 x 25 WN 11084-8.8 Zn<br>part was replaced by 50236600 | | 0,000 | 0 | 21 | 7 | | |
| 24 | 03928600 | SHIM 30X38X0,15 | 0... 2 | 30 x 38 x 0,15 | | 0,001 | 1 | 21 | 2 | | |

WWW.WOBIS.PL

| Pos. | Part no. | Description | Qty. | Notice | Add. notice | kg | EA | TA | DA | dDPW | List price |
|---|---|---|---|---|---|---|---|---|---|---|---|
| 25 | 50194300 | CIRCLIP AK 30 X 1,5 | 2 | A 30 x 1,5 K DIN 983 | | 0,003 | 4 | 21 | 2 | | |
| 26 | 50258500 | O-RING 26 X1,5 | 2 | 26 x 1,5 | | 0,001 | 4 | 11 | 1 | | |
| 27 | 01421102 | CR-HANDLE SHAFT 275 | 1 | 275 mm | | 0,910 | 1 | 21 | 4 | | |
| 27 | 01411402 | CR-HANDLE SHAFT 200 | 1 | 200 mm | | 0,720 | 1 | 21 | 2 | | |
| 27 | 01469700 | CR-HANDLE SHAFT 330 | 1 | 330 mm | | 1,350 | 1 | 21 | 4 | | |
| 27 | 01187202 | CR-HANDLE SHAFT 80 | 1 | 80 mm | | 0,410 | 1 | 21 | 2 | | |
| 27 | 01426902 | CR-HANDLE SHAFT 160 | 1 | 160 mm | | 0,670 | 1 | 21 | 4 | | |
| 27 | 01426802 | CR-HANDLE SHAFT 140 | 1 | 140 mm | | 0,585 | 1 | 21 | 2 | | |
| 28 | _noorder | No single order | - | | | | | | | | |
| 29 | 01463600 | GUIDING SHELL | 1 | | | 0,200 | 1 | 21 | 1 | | |
| 32 | 04020310 | CRANK JAW LEFT | 1 | | | 0,054 | 1 | 21 | 1 | | |
| 33 | 03985300 | GUARD | 1 | | | 0,056 | 1 | 21 | 2 | | |
| 34 | 50195800 | SHIM 10X16X1,0 | 1 | 10 x 16 x 0,5 DIN 988 | | 0,001 | 4 | 11 | 1 | | |
| 38 | 50134900 | ALL.SCR.M 8X 16 | 2 | M 8 x 16 DIN 6912-8.8 A3C | | 0,009 | 4 | 11 | 1 | | |
| 39 | 50387100 | CYL.PIN 5X20 | 1 | 5 M 6 x 20 DIN 6325 | | 0,003 | 4 | 11 | 1 | | |
| 44 | 01459500 | GUIDING SHELL | 1 | 80 - 200 mm | | 0,274 | 1 | 21 | 2 | | |
| 44 | 01433300 | GUIDING SHELL | 1 | 200 - 265 mm | | 0,269 | 1 | 21 | 2 | | |
| 45 | 50183000 | ALL.SCR. M 8X 35 | 2 | M 8 x 35 DIN 912-8.8 A3C | | 0,018 | 4 | 11 | 1 | | |
| 46 | 50148100 | FLAT WASHER 8,4 | 2 | 8,4 DIN 125-St A3C | | 0,002 | 4 | 11 | 1 | | |
| 47 | 50145900 | FLAT WASHER 10,5 | 2 | 10,5 DIN 125-St A3C | | 0,004 | 4 | 11 | 1 | | |
| 48 | 50327800 | ALL.SCR.M10X 35 | 2 | M 10 x 35 DIN 912-8.8 A3C | | 0,031 | 4 | 21 | 1 | | |
| 49 | 03579700 | SEALING RING | 1 | | | 0,006 | 1 | 21 | 2 | | |
| 50 | 04082900 | CRANKING DEVICE | 1 | 1/2" | | 0,066 | 1 | 21 | 2 | | |
| 51 | 50387601 | BUSH 1 INCH | 1 | 1" | | 0,015 | 4 | 11 | 1 | | |
| 52 | _noorder | No single order | - | | | | | | | | |
| 53 | _noorder | No single order | - | | | | | | | | |
| D | 50223300 | LOCTITE 221 | 1 | 50 ML | | 0,077 | 4 | 12 | 0 | | |
| K | 50342600 | GREASE START.DEVICE | 1 | 100 GRAMM<br>part was replaced by 50342601 | | 0,100 | 0 | 12 | 0 | | |
| | | | | | | | | | | | |

WWW.WOBIS.PL

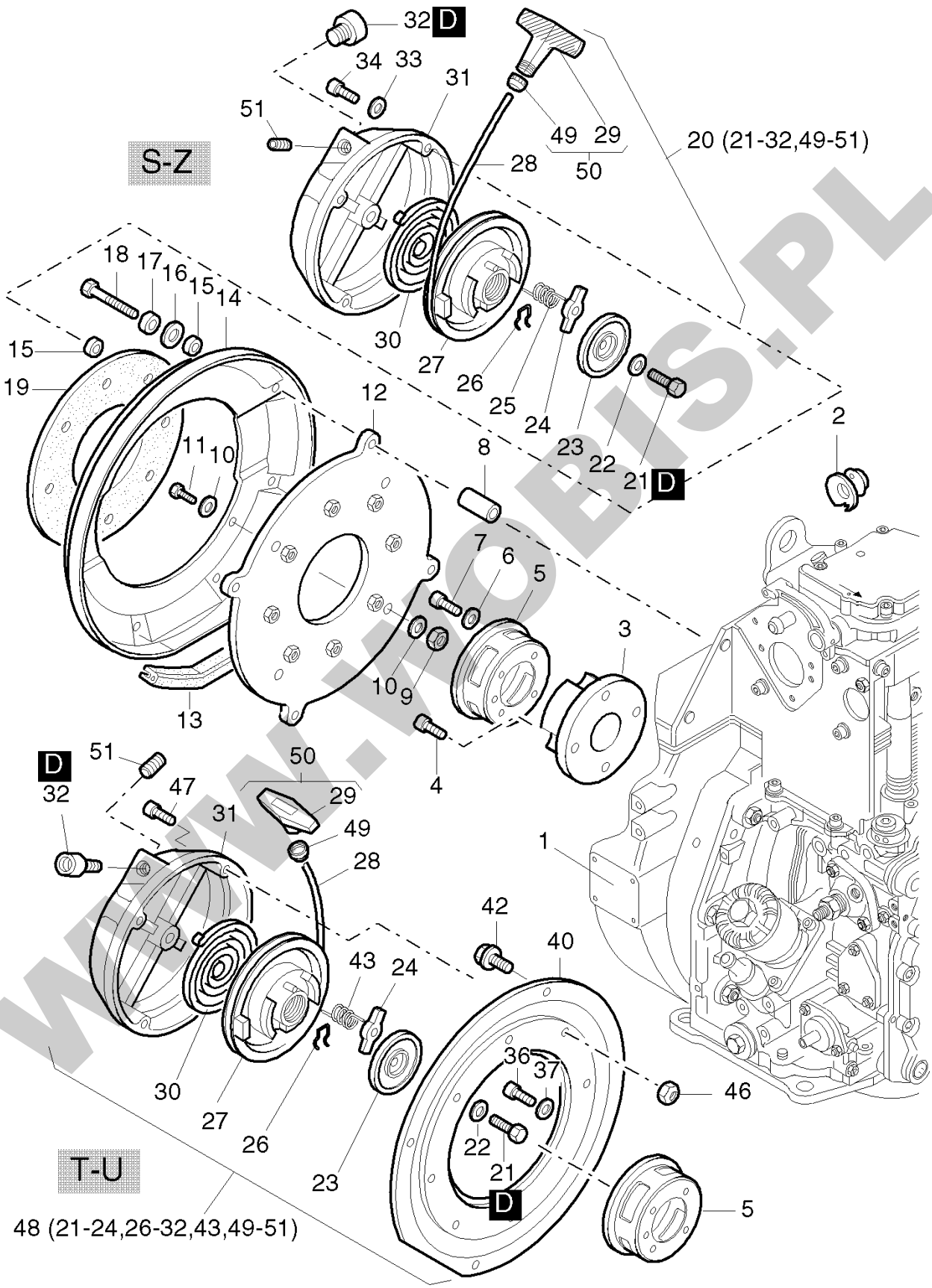


WWW.WOBIS.PL

| Pos. | Part no. | Description | Qty. | Notice | Add. notice | kg | EA | TA | DA | dDPW | List price |
|---|---|---|---|---|---|---|---|---|---|---|---|
| 1 | _noorder | No single order | - | | | | | | | | |
| 2 | 03996200 | GEARWHELL | 1 | | | 0,028 | 9 | 21 | 0 | | |
| 3 | 05006200 | FLANGE F. RECOIL ST | 1 | | | 0,520 | 1 | 21 | 5 | | |
| 4 | 50051900 | ALL.SCR.M 8X 20 | 4 | M 8 x 20 DIN 912-8.8 | | 0,013 | 4 | 11 | 1 | | |
| 5 | 05077900 | DRIVING SLEEVE | 1 | | | 0,260 | 1 | 11 | 0 | | |
| 6 | 50170900 | SPRING WASHER 6 | 4 | 6 DIN 128 - A3C | | 0,001 | 4 | 11 | 1 | | |
| 7 | 50170700 | ALL.SCR.M 6 X 16 | 4 | M 6 x 16 DIN 912-8.8 A3C | | 0,006 | 4 | 11 | 1 | | |
| 8 | 05009300 | SPACER BUSH | 4 | | | 0,020 | 1 | 21 | 5 | | |
| 9 | 40028200 | HEX.NUT M 5 | 4 | M 5 DIN 980-8 C3A | | 0,002 | 4 | 11 | 1 | | |
| 10 | 50216300 | WASHER 5,3 | 4 | 5,3 DIN 125-St A3C | | 0,001 | 4 | 11 | 1 | | |
| 11 | 50360300 | HEXSCREW M 5X 12 | 4 | M 5 x 12 DIN 933 - 8.8 A3C | | 0,003 | 4 | 21 | 5 | | |
| 12 | 01448200 | SUPPORTING PLATE | 1 | | | 0,620 | 1 | 21 | 5 | | |
| 13 | 03990700 | SEALING STRIP | 1 | | | 0,162 | 1 | 21 | 4 | | |
| 14 | 05009000 | HOUSING | 1 | | | 0,170 | 1 | 21 | 5 | | |
| 15 | 05009200 | SPACER RING | 8 | | | 0,001 | 1 | 21 | 5 | | |
| 16 | 50114300 | DISC 6,4 | 4 | 6,4 x 17 x 3 DIN 7349 A3C | | 0,005 | 4 | 11 | 1 | | |
| 17 | 50170900 | SPRING WASHER 6 | 4 | 6 DIN 128 - A3C | | 0,001 | 4 | 11 | 1 | | |
| 18 | 50383700 | HEXSCREW M 6X 55 | 4 | M 6 x 55 DIN 931-8.8 A3C | | 0,013 | 4 | 11 | 1 | | |
| 19 | 05009100 | RUBBER PLATE | 1 | | | 0,080 | 1 | 21 | 5 | | |
| 20 | 01444301 | RECOIL-START S/Z | 1 | | | 0,795 | 1 | 21 | 5 | | |
| 21 | 50146300 | HEXSCREW M 6X 18 | 1 | M 6 x 18 DIN 933-8.8 A3C | | 0,005 | 4 | 11 | 1 | | |
| 22 | 50165600 | SPRING WASHER6,5X14 | 1 | 6,5 x 14 DIN 6904 A3C | | 0,001 | 9 | 11 | 0 | | |
| 23 | 05045001 | BRAKE DISC | 1 | | | 0,011 | 1 | 11 | 1 | | |
| 24 | 05044800 | RATCHET F.REV.START | 1 | | | 0,026 | 1 | 11 | 1 | | |
| 25 | 03996300 | RETURN SPRING | 1 | | | 0,015 | 1 | 11 | 3 | | |
| 26 | 05044901 | BRAKE SPRING | 1 | | | 0,003 | 1 | 11 | 1 | | |
| 27 | 01500502 | ROPE PULLEY | 1 | part was replaced by 01548800 | | 0,123 | 0 | 11 | 7 | | |
| 28 | 05088901 | ROPE RECL.STR1750MM | 1 | 1750 mm 1 B 30/40<br>part was replaced by 01929000 | | 0,025 | 0 | 11 | 5 | | |
| 29 | _noorder | No single order | - | | | | | | | | |

WWW.WOBIS.PL

| Pos. | Part no. | Description | Qty. | Notice | Add. notice | kg | EA | TA | DA | dDPW | List price |
|---|---|---|---|---|---|---|---|---|---|---|---|
| 30 | 05045201 | RETURN SPRING | 1 | part was replaced by 05045202 | | 0,092 | 0 | 11 | 7 | | |
| 31 | 03944602 | HOUSINGF.RECOIL-ST | 1 | | | 0,447 | 1 | 11 | 3 | | |
| 32 | 03946800 | GUIDING PIECE | 1 | | | 0,012 | 1 | 11 | 3 | | |
| 33 | 50081200 | SPRING WASHER A 6 | 4 | A 6 DIN 137 - A3C | | 0,001 | 4 | 11 | 1 | | |
| 34 | 50170600 | ALL.SCR.M 6X 20 | 4 | M 6 x 20 DIN 912-8.8 A3C | | 0,007 | 4 | 11 | 1 | | |
| 36 | 50170700 | ALL.SCR.M 6 X 16 | 4 | M 6 x 16 DIN 912-8.8 A3C | | 0,006 | 4 | 11 | 1 | | |
| 37 | 50170900 | SPRING WASHER 6 | 4 | 6 DIN 128 - A3C | | 0,001 | 4 | 11 | 1 | | |
| 40 | 05091200 | ADAPTER RING | 1 | | | 0,837 | 1 | 21 | 0 | | |
| 42 | 50289200 | HEXSCREW M 6X 12 | 8 | M 6 x 12 KZ 1-8.8 A3D | | 0,005 | 4 | 11 | 1 | | |
| 43 | 05061300 | RETURN SPRING | 1 | | | 0,001 | 1 | 11 | 1 | | |
| 46 | 50328300 | HEXAGON NUT VM6 | 4 | VM 6 DIN 980-8 A3C | | 0,002 | 4 | 11 | 1 | | |
| 47 | 50170700 | ALL.SCR.M 6 X 16 | 4 | M 6 x 16 DIN 912-8.8 A3C | | 0,006 | 4 | 11 | 1 | | |
| 48 | 01172702 | RECOIL STARTER | 1 | | | 0,781 | 1 | 11 | 0 | | |
| 49 | 03665200 | RUBBER SLEEVE | 1 | | | 0,002 | 1 | 11 | 1 | | |
| 50 | 01497800 | HANDLE F.REV.START | 1 | | | 0,022 | 1 | 12 | 1 | | |
| 51 | 50043700 | CLOS.SCREW M12X1,5 | 1 | M 12 x 1,5 DIN 906 | | 0,005 | 4 | 11 | 3 | | |
| D | 50223300 | LOCTITE 221 | 1 | 50 ML | | 0,077 | 4 | 12 | 0 | | |

WWW.WOBIS.PL

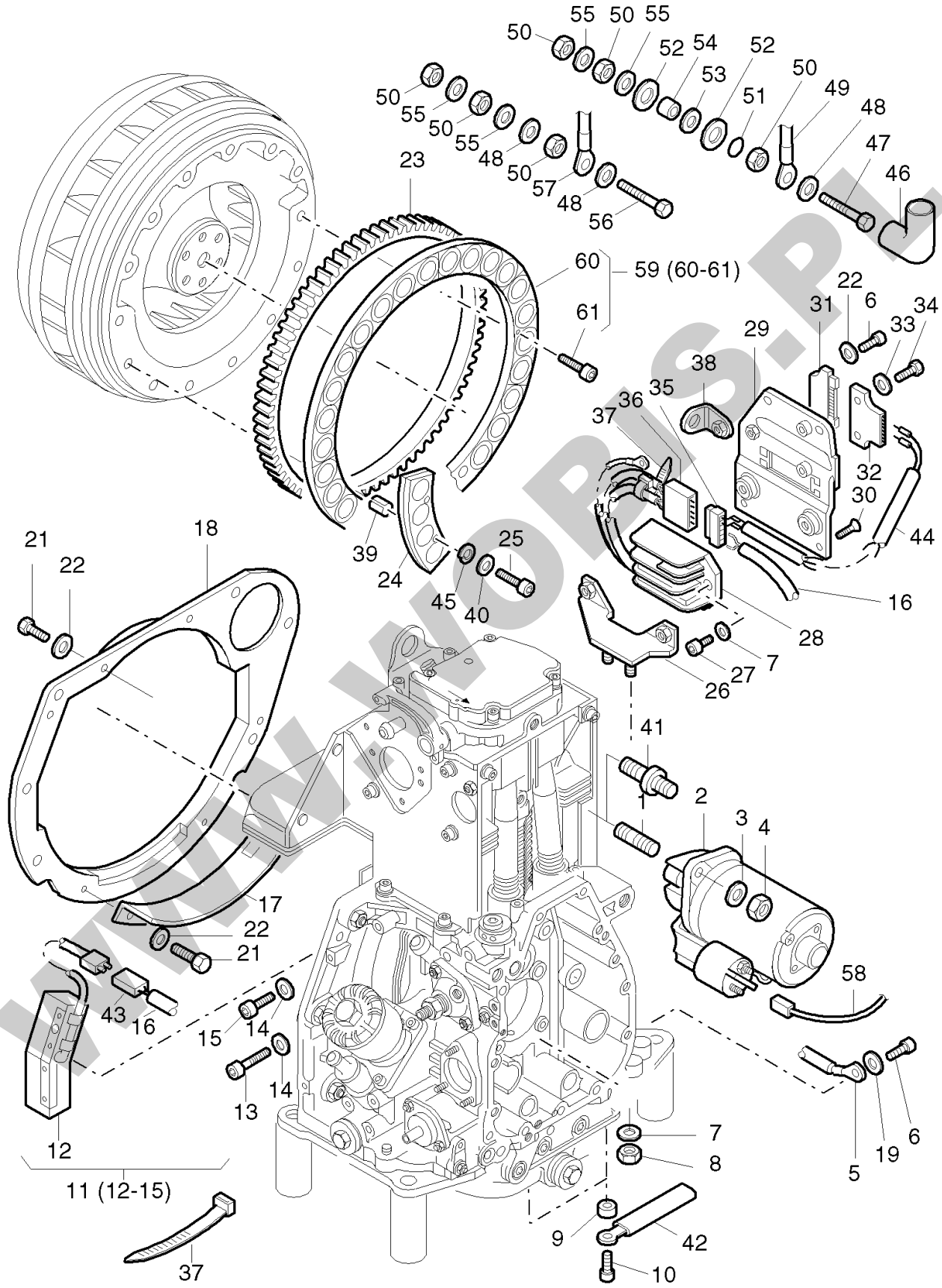
50
55
50
55
52
54
52
50
49
48
47
46
50
55
50
55
48
50
57
48
56
23
60
59 (60-61)
61
22
6
34
31
33
29
38
35
36
37
32
30
44
16
28
7
27
26
21
22
18
39
24
45
25
40
41
1
2
3
4
17
22
21
43
16
15
14
14
13
58
12
11 (12-15)
37
7
8
9
42
10
5
19
6

WWW.WOBIS.PL

| Pos. | Part no. | Description | Qty. | Notice | Add. notice | kg | EA | TA | DA | dDPW | List price |
|---|---|---|---|---|---|---|---|---|---|---|---|
| 1 | 50201200 | STUD M12X 50 | 2 | M 12 x 50 DIN 835 - 8.8 A3C<br>part was replaced by 50486400 | | 0,055 | 0 | 21 | 7 | | |
| 2 | 50389700 | STARTER 12V 2KW T/U | 1 | 12 V - 2,0 kW "T-U" | | 3,700 | 9 | 21 | 0 | | |
| 2 | 50353511 | STARTER 12V 1,6KW | 1 | 12 V - 1,6 kW "S, Z, C"<br>part was replaced by 01721000 | | 0,000 | 0 | 21 | 0 | | |
| 2 | 50382201 | STARTER 24V S/Z/C | 1 | 24 V - 1,6 kW "S, Z, C"<br>part was replaced by 50496400 | | 3,858 | 0 | 21 | 0 | | |
| 3 | 50093700 | FLAT WASHER A 13 | 2 | 13 DIN 125-St A3C | | 0,006 | 4 | 11 | 1 | | |
| 4 | 50380600 | HEXAGON NUT M 12 | 2 | M 12 DIN 970-8 A3C | | 0,014 | 4 | 21 | 1 | | |
| 5 | 01459700 | CLIP | 2 | part was replaced by 05001200 | | 0,000 | 0 | 11 | 7 | | |
| 6 | 50149100 | ALLEN SCREW M 6X 12 | 2 | M 6 x 12 DIN 912-8.8 A3C | | 0,005 | 4 | 11 | 1 | | |
| 7 | 50208500 | SPRING WASHER 8 | 4 | 8 DIN 128 A3C | | 0,001 | 4 | 11 | 1 | | |
| 8 | 50148000 | HEXAGON NUT M 8 | 2 | M 8 DIN 934-8 A3C | | 0,005 | 4 | 11 | 1 | | |
| 9 | 04021000 | BUSH 6,3X12X5 | 2 | 6,3 x 12 x 5 | | 0,003 | 1 | 21 | 1 | | |
| 10 | 50170700 | ALL.SCR.M 6 X 16 | 2 | M 6 x 16 DIN 912-8.8 A3C | | 0,006 | 4 | 11 | 1 | | |
| 11 | _noorder | No single order | - | | | | | | | | |
| 12 | 01440800 | COIL WITH WIRE 24V | 1 | 24 V | | 0,450 | 9 | 21 | 0 | | |
| 12 | 01440700 | COIL WITH WIRE 12V | 1 | 12 V | | 0,450 | 1 | 21 | 0 | | |
| 13 | 50236600 | ALL SCR.M 6X 25 | 1 | M 6 x 25 DIN 6912-8.8 A3C | | 0,006 | 4 | 11 | 1 | | |
| 14 | 50165600 | SPRING WASHER6,5X14 | 2 | 6,5 x 14 DIN 6904 A3C | | 0,001 | 9 | 11 | 0 | | |
| 15 | 50170600 | ALL.SCR.M 6X 20 | 1 | M 6 x 20 DIN 912-8.8 A3C | | 0,007 | 4 | 11 | 1 | | |
| 16 | 01462800 | ELECTRIC WIRE | 1 | | | 0,085 | 1 | 21 | 1 | | |
| 17 | _nopart | Not in this engine | - | | | | | | | | |
| 18 | 04031810 | PARTING SHEET | 1 | | | 0,233 | 1 | 21 | 1 | | |
| 19 | 50144500 | FLAT WASHER 6,4 | 1 | 6,4 DIN 125-St A3C | | 0,001 | 4 | 11 | 1 | | |
| 21 | 50165500 | HEXSCREW M 6X 12 | 5 | M 6 x 12 DIN 933-8.8 A3C | | 0,004 | 4 | 11 | 1 | | |
| 22 | 50170900 | SPRING WASHER 6 | 6 | 6 DIN 128 - A3C | | 0,001 | 4 | 11 | 1 | | |
| 23 | 03997500 | GEARRING T/U | 1 | | | 0,650 | 9 | 21 | 0 | | |
| 23 | 04032310 | GEARRING S/Z/C | 1 | | | 0,582 | 1 | 21 | 1 | | |
| 24 | 04031601 | MAGNET SEGMENT | 6 | | | 0,147 | 9 | 21 | 0 | | |
| 25 | 50327300 | ALL.SCR.M 4X 20 | 12 | M 4 x 20 DIN 912 - 8.8 A3C | | 0,003 | 4 | 11 | 1 | | |

WWW.WOBIS.PL

| Pos. | Part no. | Description | Qty. | Notice | Add. notice | kg | EA | TA | DA | dDPW | List price |
|---|---|---|---|---|---|---|---|---|---|---|---|
| 26 | 01440400 | SUPPORT | 1 | part was replaced by 01440401 | | 0,000 | 0 | 21 | 0 | | |
| 27 | 50165400 | ALL.SCR.M 8X 16 | 2 | M 8 x 16 DIN 912-8.8 A3C | | 0,009 | 4 | 21 | 1 | | |
| 28 | 01425021 | REGULATOR 24V | 1 | part was replaced by 01425022 | | 0,295 | 0 | 21 | 7 | | |
| 28 | 01248121 | REGULATOR 12V | 1 | part was replaced by 01248122 | | 0,050 | 0 | 21 | 7 | | |
| 29 | 01440100 | FASTENING PLATE | 1 | | | 0,372 | 1 | 21 | 1 | | |
| 30 | 50380800 | CTR.SUNK SCR.M6X10 | 2 | M 6 x 10 DIN 7991 -8.8 A3C | | 0,003 | 4 | 21 | 1 | | |
| 31 | 50373700 | PLUG SLEEVE HOUSING | 1 | | | 0,005 | 4 | 21 | 1 | | |
| 32 | 50373600 | PIN TERM.HOUS.6 WAY | 1 | | | 0,007 | 4 | 21 | 1 | | |
| 33 | 50216300 | WASHER 5,3 | 2 | 5,3 DIN 125-St A3C | | 0,001 | 4 | 11 | 1 | | |
| 34 | 50335700 | HEXSCREW M 5X 25 | 2 | M 5 x 25 DIN 933-8.8 A3C | | 0,005 | 4 | 11 | 1 | | |
| 35 | 50402100 | PLUG SLEEVE HOUSING | 1 | 4-P. | | 0,003 | 4 | 21 | 1 | | |
| 36 | 50402000 | PLUG HOUSING 4-P. | 1 | | | 0,002 | 4 | 21 | 1 | | |
| 37 | 50358400 | STRAP | 4 | 200 x 4,8 mm SCHWARZ | | 0,001 | 4 | 11 | 1 | | |
| 38 | 01440500 | SUPPORT | 1 | | | 0,020 | 1 | 21 | 1 | | |
| 39 | 50327400 | PIN 5X10 | 12 | 5 x 10 DIN 7346 | | 0,001 | 4 | 11 | 1 | | |
| 40 | 50147200 | FLAT WASHER 4,3 | 12 | 4,3 DIN 125 - A3C | | 0,001 | 4 | 11 | 1 | | |
| 41 | 04054200 | COLLAR SCREW | 2 | | | 0,062 | 9 | 21 | 0 | | |
| 42 | 01470200 | CLIP | 2 | part was replaced by 05023900 | | 0,005 | 0 | 21 | 7 | | |
| 43 | 50379700 | PLUG HOUSING 2-P. | 1 | | | 0,002 | 4 | 21 | 1 | | |
| 44 | 01439400 | WIRING HARNESS | 1 | | | 0,020 | 1 | 21 | 1 | | |
| 45 | 50002600 | SPRING WASHER 5 | 12 | 5 DIN 128 - A3C | | 0,001 | 4 | 11 | 1 | | |
| 46 | 40026600 | PROTECTION CAP | 1 | | | 0,005 | 4 | 11 | 1 | | |
| 47 | 50400300 | HEXSCREW M 8X 40 | 1 | M 8 x 40 DIN 933-MS | | 0,020 | 4 | 21 | 1 | | |
| 48 | 50179900 | TOOTH.LOCK WASH.J 8 | 1... 2 | J 8,4 Zn DIN 6997 A3C | | 0,001 | 4 | 21 | 1 | | |
| 49 | 01430800 | ELECTRIC WIRE B+ | 1 | "Plus" | | 0,055 | 1 | 21 | 1 | | |
| 50 | 50023000 | HEXAGON NUT M 8 | 3 | M 8 DIN 934-MS | | 0,005 | 4 | 11 | 1 | | |
| 51 | 50426900 | SERRATED WASH. A8,4 | 1 | A 8,4 DIN 6798 A3C | | 0,001 | 4 | 21 | 1 | | |
| 52 | 03814100 | INSULATING DISC | 2 | | | 0,002 | 1 | 21 | 1 | | |
| 53 | 50426800 | TOOTH.LOCK J 10,5 | 1 | J 10,5 DIN 6797 A3C | | 0,001 | 4 | 21 | 1 | | |
| 54 | 03814200 | INSULATING TUBE | 1 | | | 0,001 | 1 | 21 | 1 | | |

WWW.WOBIS.PL

| Pos. | Part no. | Description | Qty. | Notice | Add. notice | kg | EA | TA | DA | dDPW | List price |
|---|---|---|---|---|---|---|---|---|---|---|---|
| 55 | 50016800 | DISC 8,4 | 2 | 8,4 DIN 125-MS | | 0,001 | 4 | 21 | 1 | | |
| 56 | 50275300 | HEXSCREW M 8X35 | 1 | M 8 x 35 DIN 933-MS | | 0,018 | 4 | 21 | 1 | | |
| 57 | 01430900 | BATT. CABLE MINUS | 1 | "Minus" | | 0,070 | 1 | 21 | 1 | | |
| 58 | 01193401 | ELECT.WIRE START.50 | 1 | Starter 50 | | 0,017 | 1 | 21 | 1 | | |
| 59 | _nopart | Not in this engine | - | | | | | | | | |
| 60 | _noorder | No single order | - | | | | | | | | |
| 61 | _nopart | Not in this engine | - | | | | | | | | |

WWW.WOBIS.PL

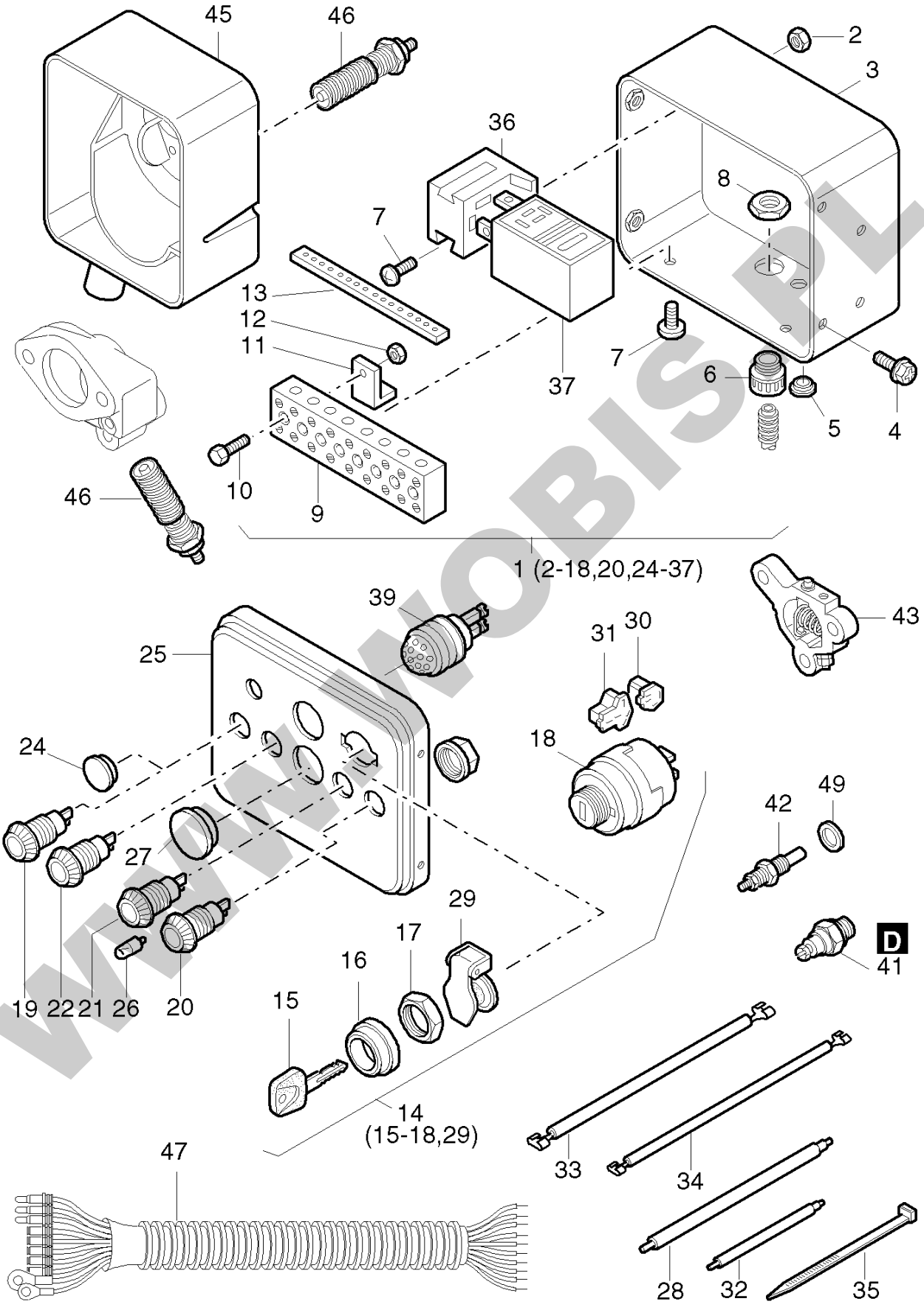
45
46
2
3
36
8
7
13
12
11
37
7
6
5
4
46
10
9
1 (2-18,20,24-37)
39
43
25
31
30
24
18
49
42
27
29
17
D
41
16
19
22
21
26
20
15
14
(15-18,29)
47
33
34
28
32
35

WWW.WOBIS.PL

| Pos. | Part no. | Description | Qty. | Notice | Add. notice | kg | EA | TA | DA | dDPW | List price |
|---|---|---|---|---|---|---|---|---|---|---|---|
| 1 | 01407000 | INSTRUMENT BOX 12V | 1 | 12 V | | 1,740 | 1 | 21 | 5 | | |
| 1 | 01457700 | INSTRUMENT BOX 24V | 1 | 24 V | | 1,711 | 1 | 21 | 0 | | |
| 2 | 40028200 | HEX.NUT M 5 | 1 | M 5 DIN 980-8 C3A | | 0,002 | 4 | 11 | 1 | | |
| 3 | 00716311 | INSTRUMENT BOX | 1 | OHNE DECKEL | | 0,760 | 1 | 21 | 2 | | |
| 4 | 50289200 | HEXSCREW M 6X 12 | 4 | M 6 x 12 KZ 1-8.8 A3D | | 0,005 | 4 | 11 | 1 | | |
| 5 | 50160800 | CLOSING PLUG 10MM | 2 | F 5 14x10,7x7,5 SCHW. | | 0,001 | 4 | 11 | 1 | | |
| 6 | 50159011 | MALE CABLE COUPLING | 1 | NH 13,5 | | 0,010 | 4 | 21 | 2 | | |
| 7 | 50049300 | FILL.HEAD SCR.M5X10 | 3 | M 5 x 10 DIN 7985-8.8 A3R | | 0,003 | 4 | 11 | 1 | | |
| 8 | 50159100 | HEXAGON NUT CE 13 M | 1 | CE 13 M | | 0,001 | 4 | 11 | 1 | | |
| 9 | 50160700 | CONNECTING BLOCK | 1 | | | 0,150 | 4 | 21 | 2 | | |
| 10 | 50158800 | ALL.SCR. M 4X 20 | 2 | M 4 x 20 DIN 84 - 4.8 A3C | | 0,003 | 4 | 21 | 2 | | |
| 11 | 03666700 | BRACKET | 2 | | | 0,015 | 1 | 21 | 2 | | |
| 12 | 50147100 | HEXAGON NUT M 4 | 2 | M4 DIN 934 - 8 A3C | | 0,001 | 4 | 11 | 1 | | |
| 13 | 05004300 | MARK | 1 | | | 0,001 | 1 | 21 | 2 | | |
| 14 | 50276502 | GLOW START.SWITCH | 1 | | | 0,191 | 4 | 21 | 2 | | |
| 15 | 50345300 | SWITCH BOX KEY | 1 | 14603 | | 0,004 | 4 | 12 | 1 | | |
| 16 | _noorder | No single order | - | | | | | | | | |
| 17 | _noorder | No single order | - | | | | | | | | |
| 18 | _noorder | No single order | - | | | | | | | | |
| 19 | _nopart | Not in this engine | - | | | | | | | | |
| 20 | 50176500 | INDICATOR LAMP BAT | 1 | BATT. | | 0,012 | 4 | 21 | 2 | | |
| 21 | 50176600 | INDICATOR LAMP OIL | 1 | OIL | | 0,012 | 4 | 21 | 2 | | |
| 22 | 50176400 | INDICATOR LAMP TEMP | 1 | TEMP. | | 0,012 | 4 | 21 | 2 | | |
| 24 | 40096000 | CLOSING PLUG | 0... 3 | F17 SCHW. | | 0,002 | 4 | 11 | 1 | | |
| 25 | 03509211 | FRONT PART | 1 | | | 0,320 | 1 | 21 | 2 | | |
| 26 | 40009800 | BULB 24V-2W | 0... 4 | 24 V - 2 W | | 0,002 | 4 | 21 | 4 | | |
| 26 | 40009700 | BULB 12V-2W | 0... 4 | 12 V - 2 W | | 0,002 | 4 | 21 | 2 | | |
| 27 | 40091400 | CLOSING CAP | 0... 2 | F24 SCHW. | | 0,004 | 4 | 21 | 2 | | |
| 28 | 01150101 | DIODE CPL. | 1 | | | 0,005 | 1 | 21 | 2 | | |
| 29 | 49050900 | COVER | 1 | | | 0,016 | 4 | 23 | 1 | | |

WWW.WOBIS.PL

| Pos. | Part no. | Description | Qty. | Notice | Add. notice | kg | EA | TA | DA | dDPW | List price |
|---|---|---|---|---|---|---|---|---|---|---|---|
| 30 | 50276600 | PLUG SLEEVE HOUSING | 1 | 4 - P | | 0,004 | 4 | 21 | 2 | | |
| 31 | 50276700 | PLUG SLEEVE HOUSING | 1 | 6 - P | | 0,005 | 4 | 21 | 2 | | |
| 32 | 01090201 | DIODE CPL. | 1 | | | 0,003 | 1 | 21 | 2 | | |
| 33 | 01089801 | DIODE CPL. | 1 | | | 0,008 | 1 | 21 | 5 | | |
| 34 | 01089901 | DIODE CPL. | 1 | | | 0,007 | 1 | 21 | 5 | | |
| 35 | 50358400 | STRAP | 1 | 200 x 4,8 mm SCHWARZ | | 0,001 | 4 | 11 | 1 | | |
| 36 | 50276000 | SOCKET | 1 | | | 0,021 | 4 | 21 | 2 | | |
| 37 | 50275902 | RELAY ENG.PROT. 24V | 1 | 24 V HATZ MSR | | 0,050 | 4 | 21 | 4 | | |
| 37 | 50275802 | RELAY ENG.PROT. 12V | 1 | 12 V HATZ MSR | | 0,050 | 4 | 21 | 2 | | |
| 39 | 50403600 | GLOW PLUG INDICATOR | 1 | 12 - 24 V | | 0,110 | 4 | 21 | 4 | | |
| 41 | 50272200 | OIL PRESSURE SWITCH | 1 | 12 - 24V Oil n > 2300 min-1 | | 0,031 | 4 | 21 | 1 | | |
| 42 | 50344500 | TEMP.SWITCH | 1 | TEMP.<br>part was replaced by 50268600 | | 0,016 | 0 | 21 | 7 | | |
| 42 | 40032801 | TEMP.SWITCH 180 C | 1 | 180 °C (5 TEMP.<br>part was replaced by 50268600 | | 0,000 | 0 | 21 | 0 | | |
| 43 | 01468200 | HEATER FLANGE | 1 | | | 0,070 | 0 | 21 | 7 | | |
| 45 | 05035101 | AIRFILTER HOUSING | 1 | (24 V)<br>part was replaced by 05035110 | | 0,000 | 0 | 21 | 7 | | |
| 46 | 50403700 | GLOW PLUG 12V | 1 | 24 V Widerstand, resistor | | 0,082 | 4 | 21 | 4 | | |
| 47 | 01433602 | WIRING HARNESS | 1 | 2000 | | 0,840 | 1 | 21 | 5 | | |
| 47 | 01192702 | WIRING HARNESS | 1 | 2000<br>part was replaced by 01192710 | | 0,850 | 0 | 21 | 3 | | |
| 49 | _nopart | Not in this engine | - | | | | | | | | |
| D | 50223300 | LOCTITE 221 | 1 | 50 ML | | 0,077 | 4 | 12 | 0 | | |
| | | | | | | | | | | | |
| | | | | | | | | | | | |
| | | | | | | | | | | | |
| | | | | | | | | | | | |
| | | | | | | | | | | | |
| | | | | | | | | | | | |
| | | | | | | | | | | | |
| | | | | | | | | | | | |

WWW.WOBIS.PL

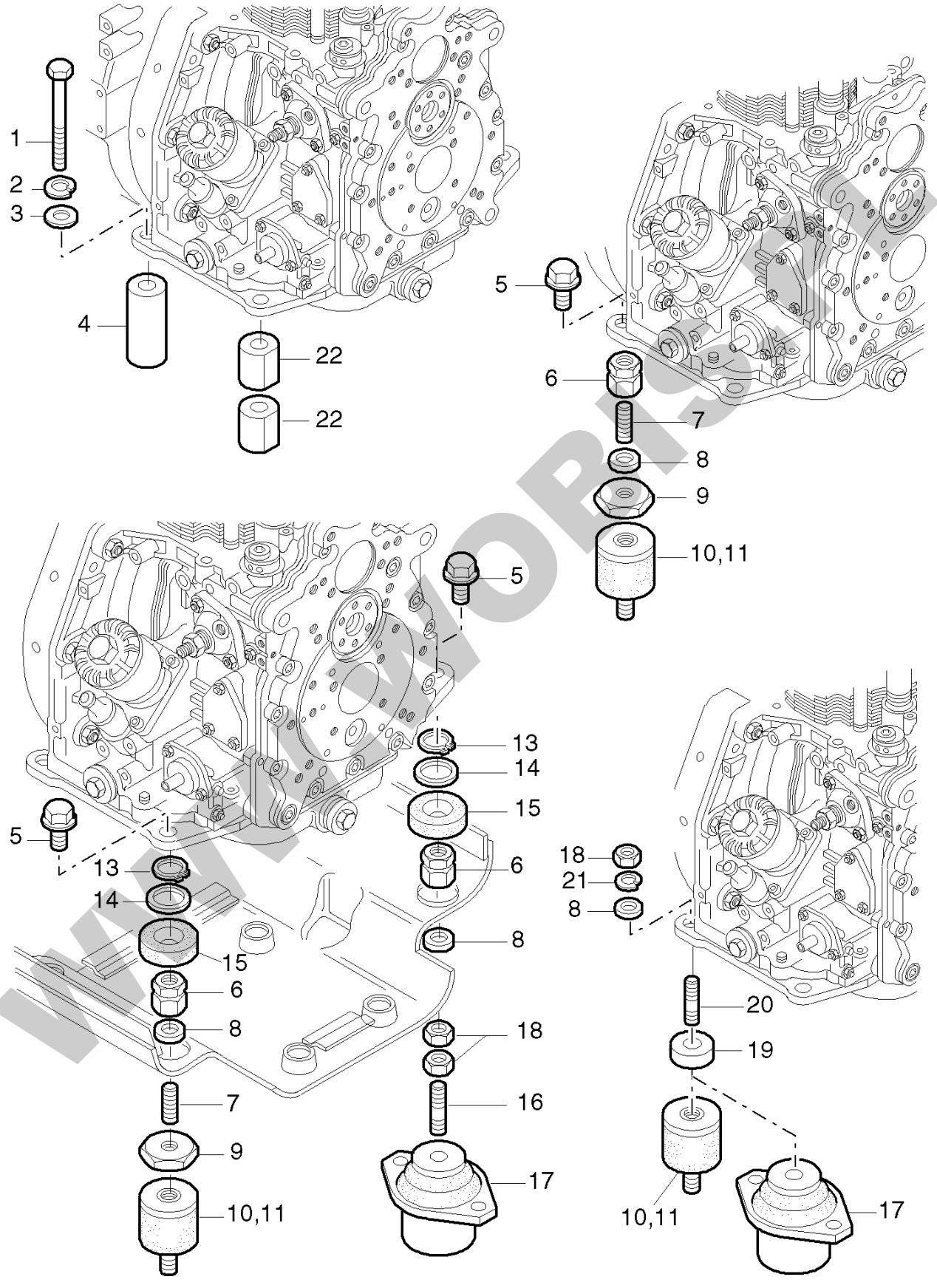
1
2
3
4
22
22
5
6
7
8
9
10,11
5
13
14
15
6
8
18
16
17
5
13
14
15
6
8
7
9
10,11
18
21
8
20
19
10,11
17

WWW.WOBIS.PL

| Pos. | Part no. | Description | Qty. | Notice | Add. notice | kg | EA | TA | DA | dDPW | List price |
|---|---|---|---|---|---|---|---|---|---|---|---|
| 1 | _noorder-1 | M10 x ... DIN 933 measure length | - | | | | | | | | |
| 2 | 50002900 | SPRING WASHER 10 | 4 | A 10 DIN 128 | | 0,002 | 4 | 11 | 1 | | |
| 3 | 50070600 | DISC 10,5 | 4 | 10,5 x 25 x 4 DIN 7349 A3C | | 0,011 | 4 | 11 | 1 | | |
| 4 | 05000800 | SPACER TUBE13X36X45 | 3 | 13 x 36 x 45 | | 0,310 | 1 | 21 | 2 | | |
| 4 | 03995400 | SPACER TUBE | 3 | 13 x 36 x 13 | | 0,090 | 1 | 21 | 4 | | |
| 5 | 50386600 | HEXSCREW M10X 20 | 4 | M 10 x 20 A3C W 158.12 - 10.9 | | 0,025 | 4 | 21 | 1 | | |
| 6 | 03993700 | NUT M10 X 27,5 | 4 | M 10 x 27,5 | | 0,075 | 1 | 21 | 2 | | |
| 7 | 03993500 | GRUB SCREW M10X30 | 4 | M 10 x 30 | | 0,013 | 1 | 21 | 2 | | |
| 8 | 50070600 | DISC 10,5 | 4 | 10,5 x 25 x 4 DIN 7349 A3C | | 0,011 | 4 | 11 | 1 | | |
| 9 | 03993400 | DISC 10,5X55X5 | 4 | 10,5 x 55 x 5 | | 0,095 | 1 | 21 | 2 | | |
| 10 | 50386700 | ANTI VIBR.MOUNTINGS | 4 | 40 Shore | | 0,168 | 4 | 21 | 2 | | |
| 11 | 50386800 | ANTI VIBR.MNT.50X45 | 4 | 55 Shore | | 0,177 | 4 | 21 | 4 | | |
| 13 | 50020400 | CIRCLIP 24X1,2 | 4 | A 24 x 1,2 DIN 471 | | 0,002 | 4 | 11 | 1 | | |
| 14 | 03592301 | WASHER 26,1X38X1 | 4 | 26,1 x 38 x 1 | | 0,005 | 1 | 11 | 1 | | |
| 15 | 03755300 | GASKET | 4 | 46/16 | | 0,004 | 1 | 11 | 1 | | |
| 16 | 03993602 | GRUB SCREW M10 X 58 | 4 | M 10 x 58 | | 0,028 | 1 | 21 | 2 | | |
| 17 | 50323600 | HYDRO BUFFER | 4 | V 12 / 600 | | 0,690 | 4 | 21 | 2 | | |
| 18 | 50145800 | HEXAGON NUT M 10 | 4 | M 10 DIN 934-8 A3C | | 0,011 | 4 | 11 | 1 | | |
| 19 | 03995400 | SPACER TUBE | 2... 4 | 13 x 36 x 13 | | 0,090 | 1 | 21 | 4 | | |
| 20 | 50124800 | STUD M10X 40 | 4 | M 10 x 40 DIN 939 | | 0,028 | 4 | 21 | 2 | | |
| 21 | 50135600 | SPRING WASHER 10 | 4 | 10 DIN 128 A3C | | 0,002 | 4 | 21 | 1 | | |
| 22 | 05020300 | SPAC.DISC 13 CHAMF. | 2 | f. Höhe 13, f. height 13 | | 0,036 | 1 | 21 | 2 | | |
| 22 | 05018100 | SPAC.SLEEV.45 CHAMF | 2 | f. Höhe 45, f. height 45 | | 0,118 | 1 | 21 | 2 | | |
| | | | | | | | | | | | |
| | | | | | | | | | | | |
| | | | | | | | | | | | |
| | | | | | | | | | | | |
| | | | | | | | | | | | |
| | | | | | | | | | | | |
| | | | | | | | | | | | |

WWW.WOBIS.PL

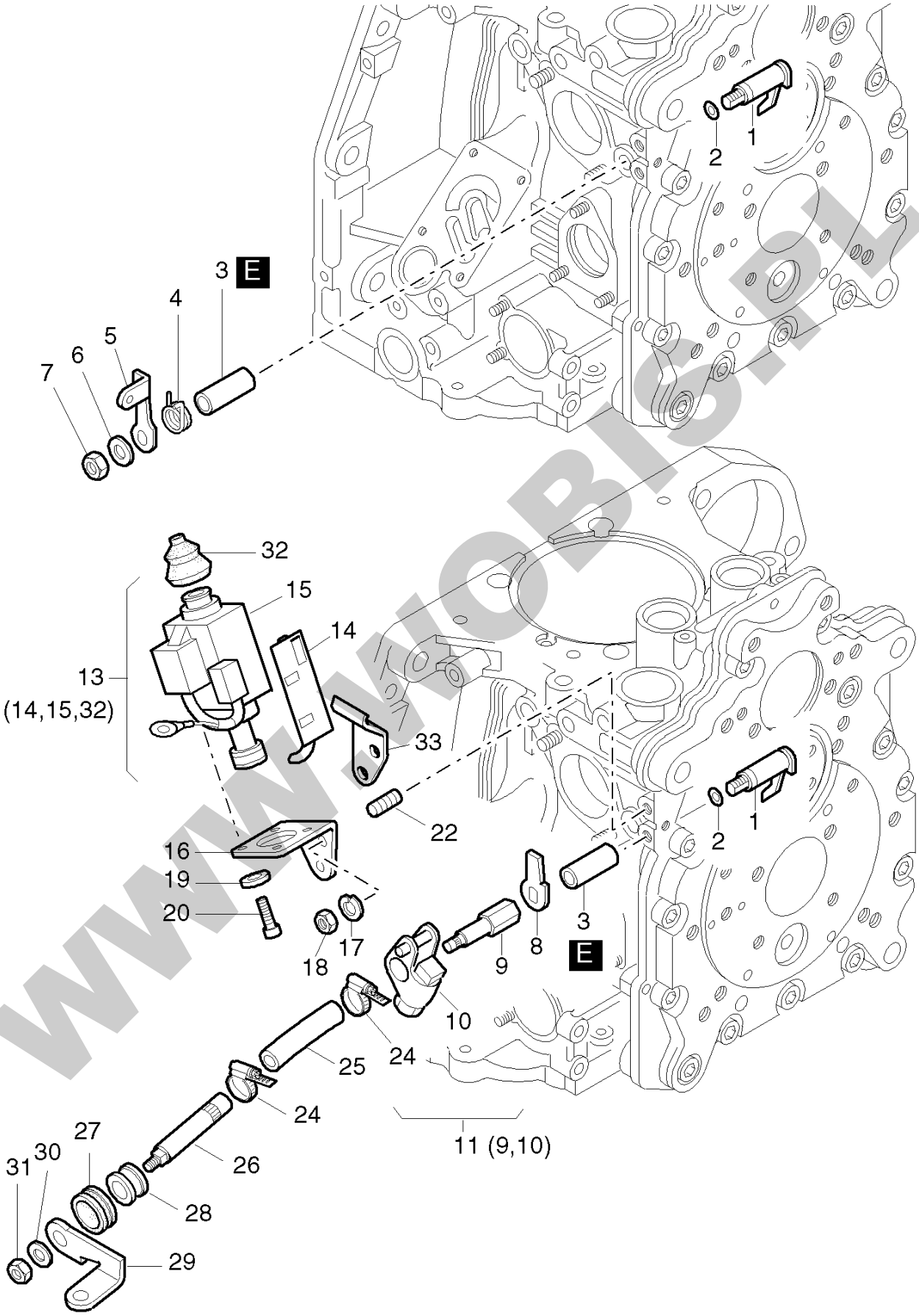
1
2
3 E
4
5
6
7
32
15
14
13
(14,15,32)
33
22
16
19
20
18
17
9
8
3 E
10
24
25
24
11 (9,10)
27
30
31
26
28
29

WWW.WOBIS.PL

| Pos. | Part no. | Description | Qty. | Notice | Add. notice | kg | EA | TA | DA | dDPW | List price |
|---|---|---|---|---|---|---|---|---|---|---|---|
| 1 | 01254603 | LEVER CPL. | 1 | part was replaced by 01254604 | | 0,020 | 0 | 21 | 7 | | |
| 2 | 50343300 | O-RING 4,6 X 1,85 | 1 | 4,6 x 1,85 | | 0,001 | 4 | 21 | 1 | | |
| 3 | 04021400 | BUSH | 1 | | | 0,007 | 1 | 21 | 1 | | |
| 4 | 04021800 | SPRING | 1 | | | 0,002 | 1 | 11 | 1 | | |
| 5 | 04021700 | LEVER | 1 | | | 0,011 | 1 | 21 | 1 | | |
| 6 | 50144500 | FLAT WASHER 6,4 | 1 | 6,4 DIN 125-St A3C | | 0,001 | 4 | 11 | 1 | | |
| 7 | 50328300 | HEXAGON NUT VM6 | 1 | VM 6 DIN 980-8 A3C | | 0,002 | 4 | 11 | 1 | | |
| 8 | 05015101 | SUPPORT | 1 | | | 0,005 | 1 | 21 | 2 | | |
| 9 | _noorder | No single order | - | | | | | | | | |
| 10 | 01493110 | LEVER F.STOP MAGNT. | 1 | part was replaced by 01493111 | | 0,015 | 0 | 21 | 7 | | |
| 11 | 01515300 | SHAFT+LEVER STOPMAG | 1 | | | 0,035 | 1 | 22 | 2 | | |
| 13 | 01515500 | LIFTING MAGNET 12V | 1 | 12 V | | 0,412 | 1 | 22 | 2 | | |
| 13 | 01515400 | LIFTING MAGNET 24V | 1 | 24 V | | 0,412 | 1 | 22 | 2 | | |
| 14 | 05058400 | CABLE HOLDER | 1 | | | 0,014 | 1 | 21 | 2 | | |
| 15 | _noorder | No single order | - | | | | | | | | |
| 16 | 05023501 | CONSOLE | 1 | | | 0,039 | 1 | 21 | 2 | | |
| 17 | 50170900 | SPRING WASHER 6 | 2 | 6 DIN 128 - A3C | | 0,001 | 4 | 11 | 1 | | |
| 18 | 50144400 | HEXAGON NUT M 6 | 2 | M 6 DIN 934 - 8 A3C | | 0,002 | 4 | 11 | 1 | | |
| 19 | 50216300 | WASHER 5,3 | 3 | 5,3 DIN 125-St A3C | | 0,001 | 4 | 11 | 1 | | |
| 20 | 50112600 | ALL.SCR.M 5X 10 | 4 | M 5 x 10 DIN 6912-8.8 A3C | | 0,003 | 4 | 11 | 1 | | |
| 22 | 50366800 | STUD M 6X12 | 2 | M 6 x 12 DIN 835-8.8 A3C | | 0,004 | 4 | 11 | 1 | | |
| 24 | 40037300 | CLAMP 8-12 | 2 | 7,5 SKZ SGT 8-12 | | 0,006 | 4 | 11 | 1 | | |
| 25 | 03999001 | FUEL HOSE 7 X 70 | 1 | 7 x 70 | | 0,005 | 1 | 21 | 1 | | |
| 26 | 03996600 | SHAFT | 1 | | | 0,035 | 1 | 21 | 1 | | |
| 27 | 03565400 | RUBBER SLEEVE | 1 | | | 0,003 | 1 | 11 | 1 | | |
| 28 | 05069200 | BUSH F.STOP SHAFT | 1 | | | 0,005 | 1 | 21 | 1 | | |
| 29 | 04021700 | LEVER | 1 | | | 0,011 | 1 | 21 | 1 | | |
| 30 | 50144500 | FLAT WASHER 6,4 | 1 | 6,4 DIN 125-St A3C | | 0,001 | 4 | 11 | 1 | | |
| 31 | 50328300 | HEXAGON NUT VM6 | 1 | VM 6 DIN 980-8 A3C | | 0,002 | 4 | 11 | 1 | | |
| 32 | 50248900 | BELLOW | 1 | | | 0,002 | 9 | 21 | 0 | | |

WWW.WOBIS.PL

| Pos. | Part no. | Description | Qty. | Notice | Add. notice | kg | EA | TA | DA | dDPW | List price |
|---|---|---|---|---|---|---|---|---|---|---|---|
| 33 | 05205700 | SUPPORT | 1 | | | 0,030 | 1 | 21 | 1 | | |
| E | 50223400 | LOCTITE 648 | 1 | 10 ML | | 0,021 | 4 | 12 | 0 | | |

WWW.WOBIS.PL

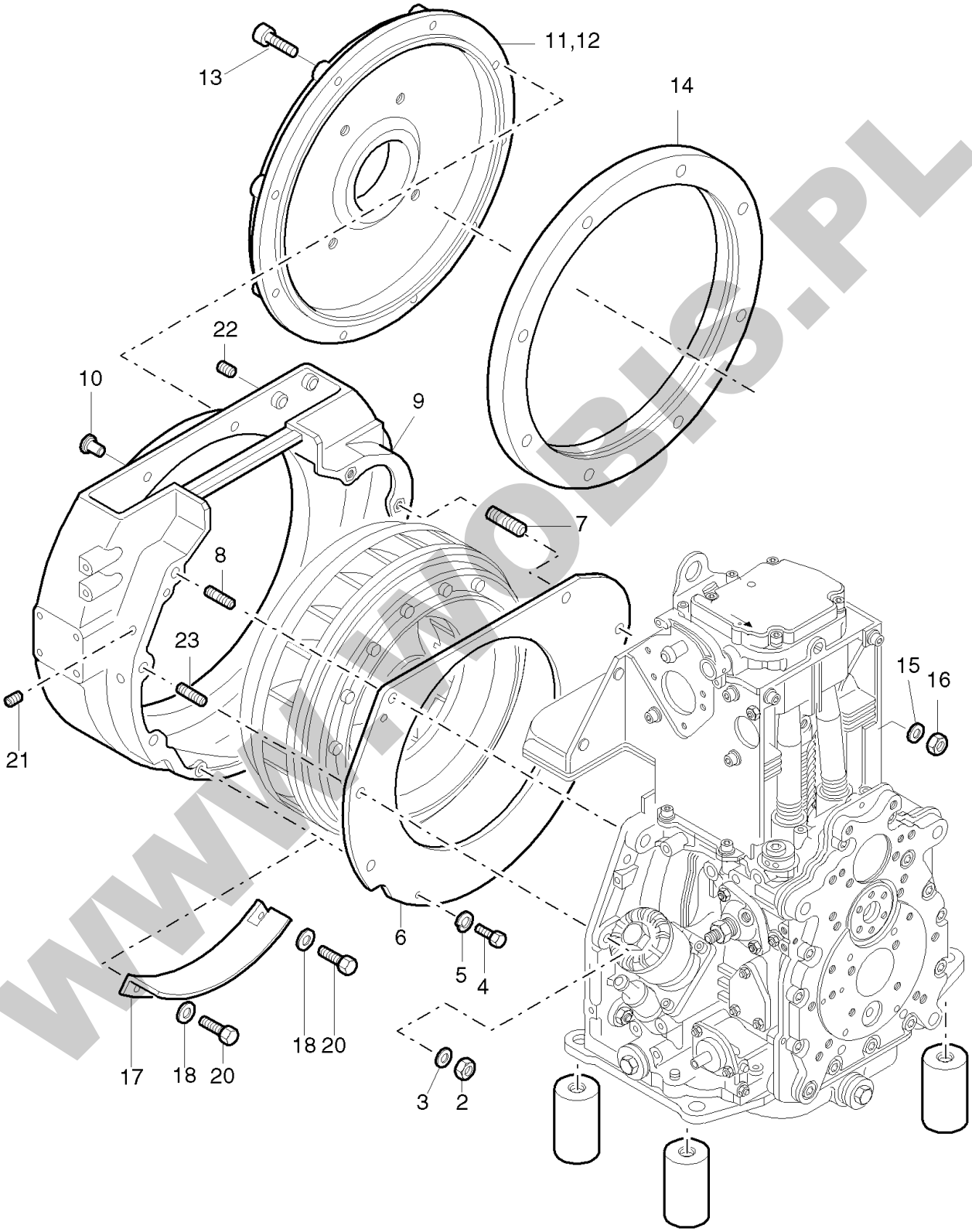


WWW.WOBIS.PL

| Pos. | Part no. | Description | Qty. | Notice | Add. notice | kg | EA | TA | DA | dDPW | List price |
|---|---|---|---|---|---|---|---|---|---|---|---|
| 2 | 50145800 | HEXAGON NUT M 10 | 4 | M 10 DIN 934-8 A3C | | 0,011 | 4 | 11 | 1 | | |
| 3 | 50145900 | FLAT WASHER 10,5 | 4 | 10,5 DIN 125-St A3C | | 0,004 | 4 | 11 | 1 | | |
| 4 | 50177100 | HEXSCREW M 6X 16 | 2 | M 6 x 16 DIN 933-8.8 A3C | | 0,005 | 4 | 11 | 1 | | |
| 5 | 50170900 | SPRING WASHER 6 | 2 | 6 DIN 128 - A3C | | 0,001 | 4 | 11 | 1 | | |
| 6 | 04031100 | PARTING SHEET | 1 | | | 0,390 | 1 | 11 | 1 | | |
| 7 | 50475000 | STUD M12FO X40 | 2 | M 12 x 40 DIN 835-8.8 A3C | | 0,046 | 4 | 11 | 1 | | |
| 8 | 50040900 | STUD M10X 35 | 3 | M 10 x 35 DIN 835 - 8.8 | | 0,029 | 4 | 11 | 1 | | |
| 9 | 01688900 | INTERM.HOUS.1D30/41 | 1 | SAE 6 1D30-1D41 ALU. | | 2,815 | 1 | 12 | 1 | | |
| 10 | 50421600 | CLOSING PLUG | 8 | 12 | | 0,001 | 4 | 11 | 1 | | |
| 11 | 03976100 | HOUSING SAE B | 1 | SAE "B" Ø 146,1 | | 2,670 | 0 | 21 | 7 | | |
| 12 | _noorder | No single order | - | | | | | | | | |
| 13 | 50055200 | ALL.SCR.M10X 60 | 8 | M 10 x 60 DIN 912 - 8.8 | | 0,046 | 4 | 21 | 2 | | |
| 14 | _noorder | No single order | - | | | | | | | | |
| 15 | 50093700 | FLAT WASHER A 13 | 2 | 13 DIN 125-St A3C | | 0,006 | 4 | 11 | 1 | | |
| 16 | 50093600 | HEXAGON NUT M 12 | 2 | M12 DIN 934-8 A3C | | 0,017 | 4 | 11 | 1 | | |
| 17 | _noorder | No single order | - | | | | | | | | |
| 18 | _noorder | No single order | - | | | | | | | | |
| 20 | _noorder | No single order | - | | | | | | | | |
| 21 | 50395600 | GRUB SCREW M 12X1,5 | 2 | M 12 x 1,5 DIN 906 A3C | | 0,060 | 4 | 11 | 0 | | |
| 22 | 50226000 | GRUB SCREW M 8X6 | 2 | M 8 x 6 DIN 913-45H TU.FLEC | | 0,002 | 4 | 11 | 1 | | |
| 23 | 50041200 | STUD M10X 45 | 1 | M 10 x 45 DIN 835 - 8.8 | | 0,035 | 4 | 11 | 1 | | |

WWW.WOBIS.PL

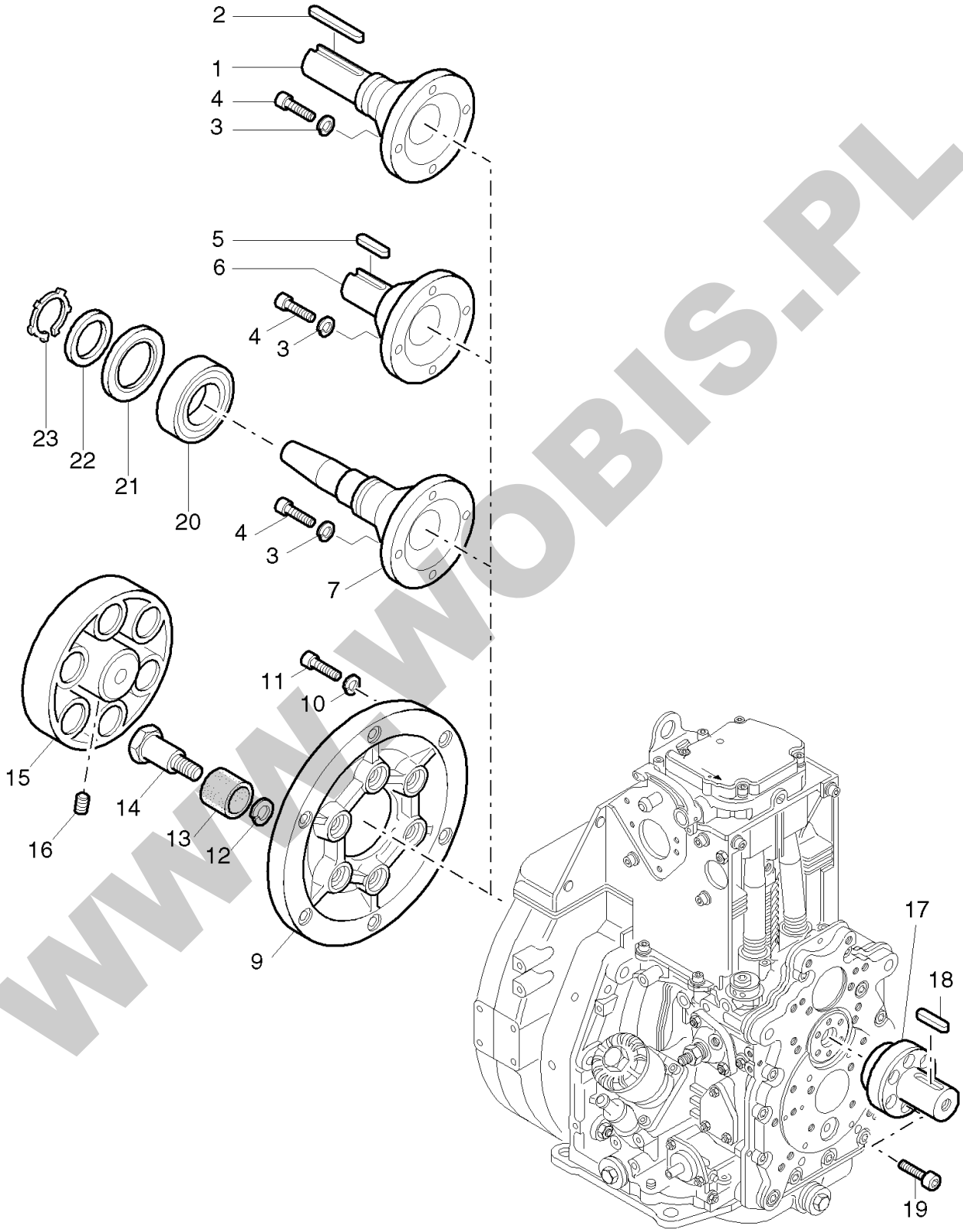


WWW.WOBIS.PL

| Pos. | Part no. | Description | Qty. | Notice | Add. notice | kg | EA | TA | DA | dDPW | List price |
|---|---|---|---|---|---|---|---|---|---|---|---|
| 1 | 03952001 | SHAFT 25,4X161,0 | 1 | 2 ø 1" ZENTR.100 | | 1,525 | 1 | 21 | 2 | | |
| 2 | 03962700 | FITTINGKEY A6,35X63 | 1 | A 6,35 x 63<br>part was replaced by 05141600 | | 0,000 | 0 | 11 | 7 | | |
| 3 | 50208500 | SPRING WASHER 8 | 4 | 8 DIN 128 A3C | | 0,001 | 4 | 11 | 1 | | |
| 4 | 50171500 | ALL.SCR.M 8X 25 | 4 | M 8 x 25 DIN 912-8.8 A3C | | 0,015 | 4 | 11 | 1 | | |
| 5 | 50011500 | FITTINGKEY A 8X7X35 | 1 | A 8 x 7 x 35 DIN 6885 | | 0,014 | 4 | 21 | 2 | | |
| 6 | 03954300 | SHAFT 30X100 | 1 | 2 ø 30 mm ZENTR.100 | | 2,228 | 1 | 21 | 2 | | |
| 7 | 03953201 | STUBSHFT.TAP.X177,5 | 1 | 4 (1") keg., con. ZENTR.100 | | 1,580 | 1 | 21 | 4 | | |
| 9 | 03951700 | FLANGE | 1 | | | 1,850 | 1 | 21 | 4 | | |
| 10 | 50208500 | SPRING WASHER 8 | 6 | 8 DIN 128 A3C | | 0,001 | 4 | 11 | 1 | | |
| 11 | 50366300 | ALL.SCR.M 8X 20 | 6 | M 8 x 20 DIN 912-8.8 A3C | | 0,013 | 4 | 11 | 1 | | |
| 12 | 50061601 | SPRING WASHER 12 | 6 | VHZ 12 | | 0,002 | 4 | 21 | 2 | | |
| 13 | 03151000 | RUBBER SHELL | 6 | SCHLAUCHST | | 0,015 | 1 | 21 | 2 | | |
| 14 | 03046900 | TAPPET | 6 | | | 0,090 | 1 | 21 | 2 | | |
| 15 | 03004602 | COUNTER FLANGE | 1 | | | 2,270 | 1 | 21 | 4 | | |
| 16 | 50004600 | GRUB SCREW M 8X16 | 1 | M 8 x 16 DIN 916-45H A3C | | 0,003 | 4 | 11 | 1 | | |
| 17 | 05007400 | STUBSHAFT 25X65 | 1 | 25 x 65 ZENTR. 30 | | 0,500 | 1 | 21 | 4 | | |
| 18 | 50011500 | FITTINGKEY A 8X7X35 | 1 | A 8 x 7 x 35 DIN 6885 | | 0,014 | 4 | 21 | 2 | | |
| 19 | 50170700 | ALL.SCR.M 6 X 16 | 6 | M 6 x 16 DIN 912-8.8 A3C | | 0,006 | 4 | 11 | 1 | | |
| 20 | 50015000 | GROOV.BALLBEAR.6307 | 1 | 6307 DIN 625 FABR.URB | | 0,444 | 4 | 21 | 2 | | |
| 21 | 50354200 | NILOS RING 6307 ZAV | 1 | 6307 ZAV | | 0,009 | 4 | 21 | 2 | | |
| 22 | 50354300 | SPACER RING | 1 | A 35 | | 0,010 | 4 | 21 | 2 | | |
| 23 | 50354400 | CIRCLIP AL 35X1,5 | 1 | AL 35 x 1,5 | | 0,004 | 4 | 21 | 2 | | |
| | | | | | | | | | | | |
| | | | | | | | | | | | |
| | | | | | | | | | | | |
| | | | | | | | | | | | |
| | | | | | | | | | | | |
| | | | | | | | | | | | |
| | | | | | | | | | | | |
| | | | | | | | | | | | |

WWW.WOBIS.PL

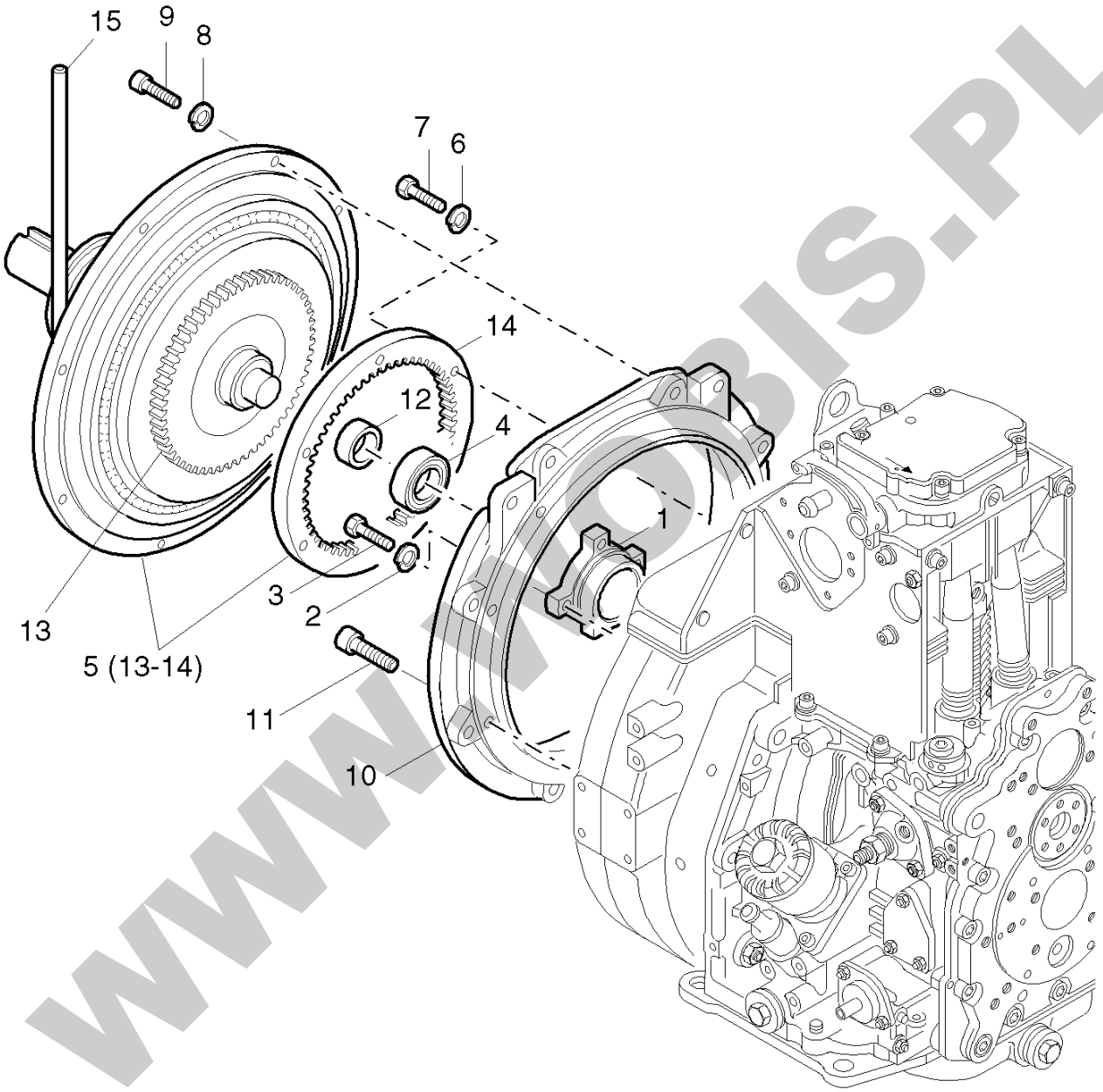


WWW.WOBIS.PL

| Pos. | Part no. | Description | Qty. | Notice | Add. notice | kg | EA | TA | DA | dDPW | List price |
|---|---|---|---|---|---|---|---|---|---|---|---|
| 1 | 03961200 | FLANGE | 1 | | | 0,310 | 1 | 21 | 4 | | |
| 2 | 50002800 | SPRING WASHER 8 | 4 | 8 DIN 128 | | 0,001 | 4 | 11 | 1 | | |
| 3 | 50026800 | HEXSCREW M 8X 20 | 4 | M 8 x 20 DIN 933-8.8 | | 0,012 | 4 | 11 | 1 | | |
| 4 | 50014100 | GROOV.BALLBEAR.6205 | 1 | DIN 625 6205 2RS | | 0,128 | 4 | 21 | 4 | | |
| 5 | 50349300 | CLUTCH BD 110/15 | 1 | BD 110/15 -5-6,5ZOLL | | 20,400 | 4 | 21 | 4 | | |
| 6 | 50002800 | SPRING WASHER 8 | 6 | 8 DIN 128 | | 0,001 | 4 | 11 | 1 | | |
| 7 | 50027000 | HEXSCREW M 8X 25 | 6 | M 8 x 25 DIN 933 - 8.8 | | 0,014 | 4 | 11 | 1 | | |
| 8 | 50135600 | SPRING WASHER 10 | 8 | 10 DIN 128 A3C | | 0,002 | 4 | 21 | 1 | | |
| 9 | 50093400 | ALL.SCR.M10X 30 | 8 | M 10 x 30 DIN 912-8.8 A3C | | 0,028 | 4 | 21 | 1 | | |
| 10 | 03981200 | INTERMED.HOUS.SAE 5 | 1 | SAE 5 | | 1,780 | 1 | 21 | 2 | | |
| 11 | 50327800 | ALL.SCR.M10X 35 | 8 | M 10 x 35 DIN 912-8.8 A3C | | 0,031 | 4 | 21 | 1 | | |
| 12 | 05019900 | SPACER BUSH | 1 | 25 x 35 x 8<br>part was replaced by 05295900 | | 0,030 | 1 | 21 | 4 | | |
| 13 | 49065800 | FRICTION DISC SET | 1 | | | 0,365 | 4 | 23 | 2 | | |
| 14 | 49070300 | DRIVING RING | 1 | | | 1,021 | 4 | 23 | 2 | | |
| 15 | 49066000 | LEVER | 1 | | | 0,050 | 0 | 23 | 0 | | |

WWW.WOBIS.PL

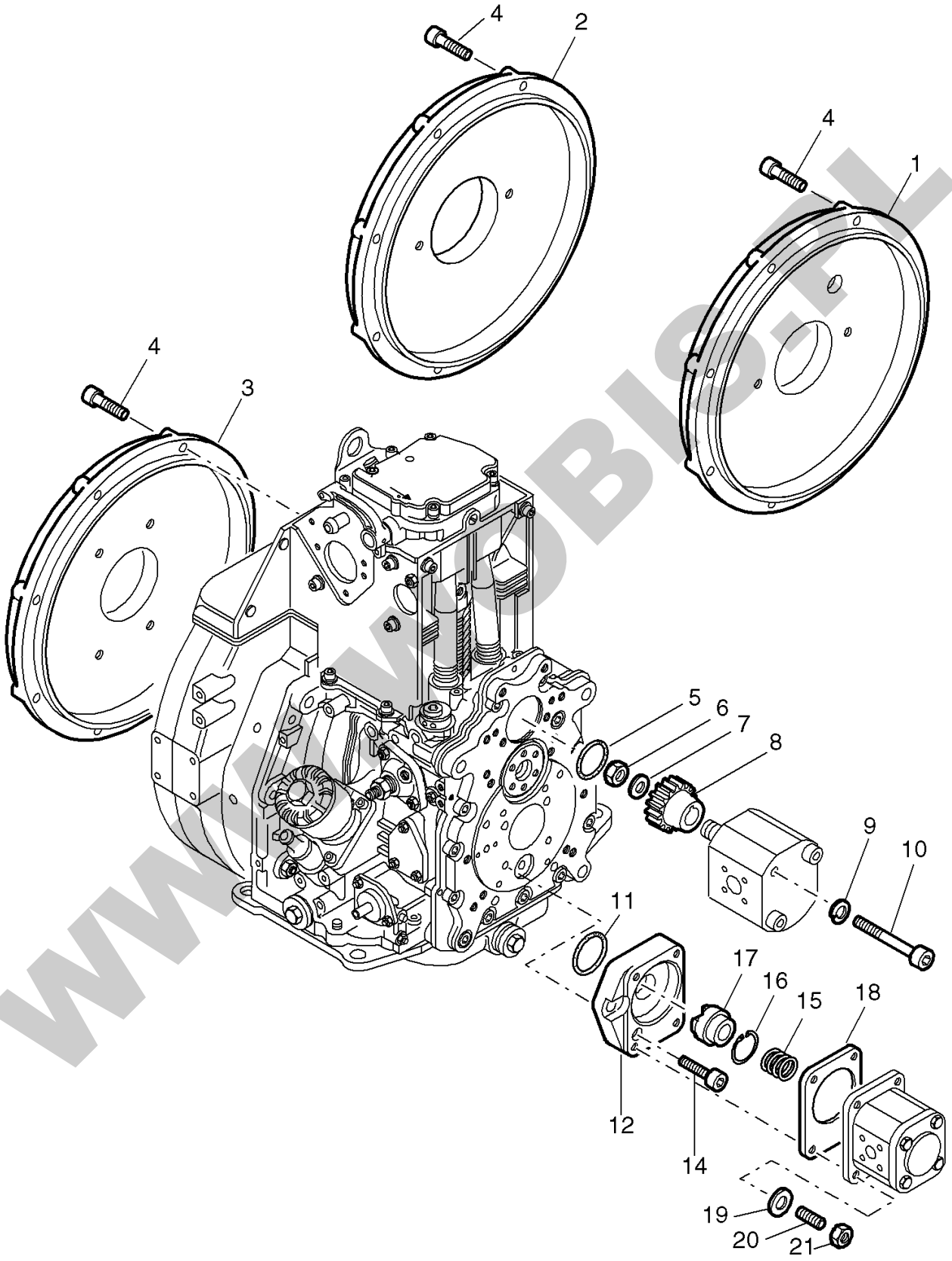


WWW.WOBIS.PL

| Pos. | Part no. | Description | Qty. | Notice | Add. notice | kg | EA | TA | DA | dDPW | List price |
|---|---|---|---|---|---|---|---|---|---|---|---|
| 1 | 03976300 | HOUSING HP SAE A | 1 | part was replaced by 03976301 | | 0,000 | 0 | 21 | 7 | | |
| 2 | 03976200 | HOUSING HP SAE B | 1 | SAE "B" 101,6 | | 2,300 | 0 | 21 | 7 | | |
| 3 | 03976700 | HOUSING HP BOSCH | 1 | BOSCH 80 | | 2,432 | 0 | 21 | 7 | | |
| 4 | 50055200 | ALL.SCR.M10X 60 | 8 | M 10 x 60 DIN 912 - 8.8 | | 0,046 | 4 | 21 | 2 | | |
| 5 | _nopart | Not in this engine | - | | | | | | | | |
| 6 | _nopart | Not in this engine | - | | | | | | | | |
| 7 | _nopart | Not in this engine | - | | | | | | | | |
| 8 | _nopart | Not in this engine | - | | | | | | | | |
| 9 | _noorder | No single order | - | | | | | | | | |
| 10 | _noorder | No single order | - | | | | | | | | |
| 11 | 50375300 | O-RING 46X2,5 | 1 | 46 x 2,5 | | 0,001 | 4 | 21 | 2 | | |
| 12 | 04036000 | INTERMEDIATE FL.HP | 1 | | | 0,328 | 1 | 21 | 2 | | |
| 14 | 50397900 | ALL.SCR.M10X22TUF | 4 | M 10x22 DIN 912-8.8 A3C TUF 360G | | 0,020 | 4 | 21 | 2 | | |
| 15 | 04036200 | PRESSURE SPRING | 1 | | | 0,002 | 1 | 21 | 2 | | |
| 16 | 50019700 | CIRCLIP 14X1 | 1 | J 14 x 1 DIN 472 | | 0,001 | 4 | 21 | 2 | | |
| 17 | 04035900 | SPLINED COUPLING | 1 | part was replaced by 01508900 | | 0,077 | 0 | 21 | 2 | | |
| 18 | 03568000 | GASKET | 1 | | | 0,002 | 1 | 21 | 1 | | |
| 19 | 50095100 | SPRING WASHER A 8 | 4 | A 8 DIN 137 A3C | | 0,001 | 4 | 11 | 1 | | |
| 20 | 50037800 | STUD M 8X 22 | 4 | M 8 x 22 DIN 835-10.9 | | 0,012 | 4 | 11 | 1 | | |
| 21 | 50148000 | HEXAGON NUT M 8 | 4 | M 8 DIN 934-8 A3C | | 0,005 | 4 | 11 | 1 | | |

WWW.WOBIS.PL